MXG SERIES LED DRIVERS

DL-100W-MXG SPEC V1.1

GUANGDONG DONE POWER TECHNOLOGY CO.,LTD

Features

- Class I structure
- Input voltage: 120-277 V ~ 50/60 Hz
- Efficiency :91%(Typ.)
- Constant power drive and constant current output control mode
- Metal shell structure, protection grade: IP67
- Lightning protection level: differential mode 6kV, common mode 15kV
- Function selection:
  Output current is adjusted by external potentiometer (A version only)
  Isolated 3 in 1 dimming (P version only)
- Lifetime design： 5 years

Applications

Road lighting、Industrial lighting、Venue lighting
Floodlight lighting、Landscape lighting 、Plant lighting

Model list

Model NO.	Input voltage	Output power	Output voltage	The default current	Eff.	T.H.D	PF
DL-100W-V143A-MXG DL-100W-V143P-MXG	120-277V 50/60Hz	100W	71-143Vdc	0.7A	≥91%	<10%	≥0.95
DL-100W-V56A-MXG DL-100W-V56P-MXG	120-277V 50/60Hz	100W	25-56Vdc	2.4A	≥89.5%	<10%	≥0.95

Note :

1. Test conditions of the above parameters: Ta=25℃, 230Vac input, full load operation for 30 minutes;
2. When the input is less than 108Vac,the output power range is 50W±20%.When input 120-277VAC,rated power 100W, Please refer to “THE OUTPUT POWER VS INPUT VOLTAGE” curve chart for details.

Input characteristics

Parameter	Min	Typ.	Max	Note
Rated input voltage	120Vac	230Vac	277Vac	
Input voltage range	108Vac		305Vac	
Rated frequency	47Hz	50/60Hz	63Hz	
Power factor	-	0.95	-	@230Vac full load
T.H.D.	-	-	10%	@230Vac full load
Input current	-	-	1.1A	@120Vac full load
Inrush current	-	-	70A	230Vac, cold start (25℃)

Output characteristic

Parameter	Min	Typ.	Max	Note
Rated current DL-100W-V56P/A-MXG DL-100W-V143P/A-MXG	 1.3A 0.5A	 1.8A 0.7A	 2.8A 1.05A	
Output current range DL-100W-V56P/A-MXG DL-100W-V143P/A-MXG	 1.3A 0.5A	 - -	 2.8A 1.05A	
Output voltage range DL-100W-V56P/A-MXG DL-100W-V143P/A-MXG	 25V 71V	 - -	 56V 143V	
Rated power(90-120Vac)	-	50W	100W	The derating begins when the input voltage is less than 108Vac
Rated power(120-277Vac)	-	100W	-	
No-load voltage DL-100W-V56P/A-MXG DL-100W-V143P/A-MXG	 - -	 - -	 75V 185V	
Efficiency@120Vac DL-100W-V56P/A-MXG DL-100W-V143P/A-MXG	 87.5% 88.5%	 88% 89%	-	full load@120Vac

Output characteristic

Parameter	Min	Typ.	Max	Note
Efficiency@230Vac DL-100W-V56P/A-MXG DL-100W-V143P/A-MXG	 89.5% 90.5%	 90% 91%	-	full load@230Vac
Accuracy of output current	-5%	-	+5%	full load constant-power range
Output Current Ripple	-	5%Iomax	-	100% load，20 MHz BW； Ripple = rms/ average
Line regulation	-3%	-	+3%	full load
Load regulation	-3%	-	+3%	full load
Starting time	300ms	-	1000ms	Full load@120-277Vac

Note: The output current range is limited by the input and output voltage, please refer to “I-V WORKING AREA” for details.

Dimming characteristic

Dimming function		Min	Typ.	Max	Instructions
1-10V Dimming (Optional)	Safe applied voltage range	1V	-	12V	When the external voltage is ≥12V, the dimming will fail
	Dimming output range	10%	-	100%	-
	Rated dimming voltage range	1V	-	10V	It can be set to negative dimming mode through program setting
PWM Dimming (Optional)	PWM high level	9.5V	-	10.5V	-
	PWM low level	0V	-	0.3V	-
	PWM frequency scope	300Hz	-	2000Hz	-
	PWM duty cycle	10%	-	99%	Output full power at 99% duty cycle
Resistor Dimming (Optional)	External resistance value	10KΩ	-	100KΩ	-
	Dimming output range	10%	-	100%	-

Note:

1. Output current of dimming port: 100uA (typical value);
2. The maximum withstand voltage of the dimming port is 12V. If the external power supply voltage exceeds 12V or the signal line is reversely connected, the power supply will be damaged.
3. When Dimming input is 0V in the constant-power range,the lamp can be dim-to-off.

4. The default dimming setting is a three-in-one positive logic Dimming; timer dimming,0-10V,0-3.3V,0-5V or other voltage dimming and positive or reverse Logic dimming can be completed by the Done-Power programmer with off-line or on-line mode.

Protection

Function		Function instructions			
Input under-voltage protection		When the input voltage is less than 108Vac, the output power gradually decreases.			
Input over-voltage protection	Input over-voltage protection	Min.	Typ.	Max.	Notes
		320 Vac	340 Vac	350 Vac	Turn off the output when the input voltage exceeds protection voltage.
	Input over-voltage recovery	Min.	Typ.	Max.	Notes
		300 Vac	320 Vac	340 Vac	Auto Recovery. The driver will restart when the input voltage falls below recovery voltage.
Output overload protection		Protection mode:hiccup mode,recovers automatically after fault condition is removed.			
Output short circuit protection		Hiccup mode:recovers automatically after fault condition is removed			
Over temperature protection		Self-recovery type：when the housing temperature is greater than 90℃, the output power decreases gradually.			
Output over-voltage protection		Protection mode: Hiccup mode or clamped in output highest voltage , the product is not damaged，LED driver works normally after fault condition is removed.			

Note:

1. Unless otherwise specified, all specifications and parameters shall be measured at the conditions of 230Vac (50Hz), rated load and 25℃ of ambient temperature;
2. Including setting error, line regulation and load regulation.

Environmental

Environmental categories	Parameter
Working temperature	Tcase= -40 ~ +90℃ (refer to "Output power VS Tcase Curve ")
Working humidity	20 ~ 95% RH, non condensing
Max.Case Temp.	Tcase=+90℃
Storage temperature、humidity	-40~+80℃, 10 ~ 95% RH
Resistant to vibration	10 ~ 500Hz, 5G 12 min/cycle, X, Y, Z axis 72 min each
MTBF	230Khrs min. MIL-HDBK-217F (Ta=25℃)
Lifetime	70,000 hours @Tcase≤75℃,230Vac, 80%Load,Please refer to "Tcase VS Lifetime" section

Safety and EMC

Safety categories	Standard
Safety	GB19510.1、GB19510.14、EN61347-1、EN61347-2-13、IEC61347-1、IEC61347-2-13、AS/NZS61347.1、AS61347.2.13 UL8750;
EMC	EN 55015、EN 61547、EN 61000-3-2、GB/T 17743、GB17625.1、EN 61000-3-3 FCC Part 15
Surge protection	Differential mode L-N ±6KV（2 ohm）,common mode L，N-PE± 15 KV (12 ohm)；Refer to IEC61000-4-5 2014 Criterion B
High-pot test	I/P-O/P:3.75KVac I/P-PE :1.5KVac O/P-PE : 0.5KVac I/P-DIM:3.75KVac O/P-DIM:1.5KVac
Insulation impedance	I/P-PE:100MΩ / 500VDC; I/P-O/P:100MΩ / 500VDC / 25℃/ 70% RH
Leakage current	<0.7mA@277Vac

Note:

1.The driver is considered as a component that will be operated in combination with the final equipment. Since EMC performance will be affected by the complete installation,the final equipment manufacturers must re-qualify EMC Directive on the complete installation again.

I-V Working area

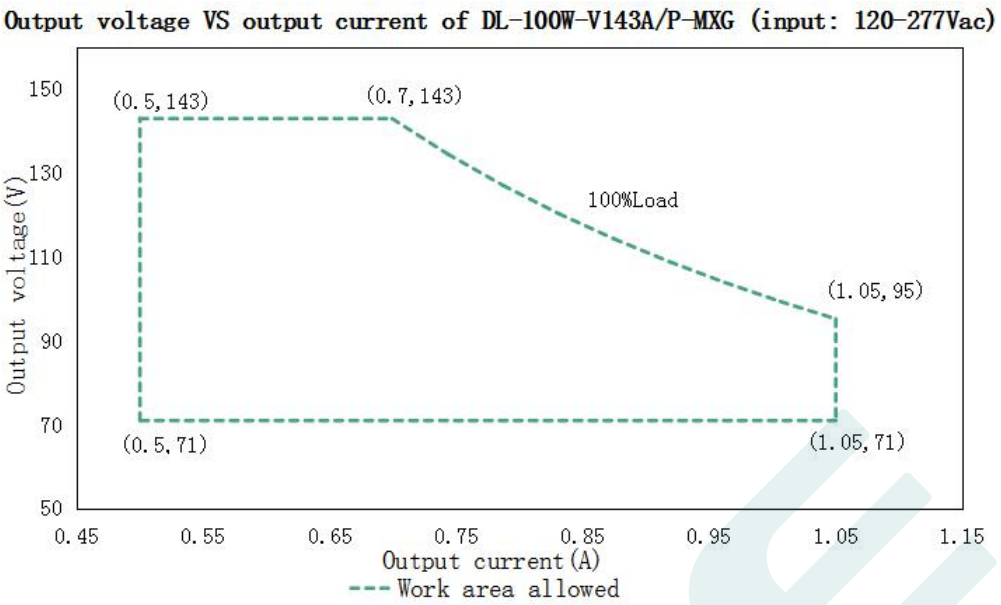

Load	Output								
Load working Voltage	71V	80V	89V	95V	107V	116V	125V	134V	143V
Io_MAX	1.05A	1.05A	1.05A	1.05A	0.93A	0.86A	0.8A	0.74A	0.7A
Po_MAX	74.5W	84W	93.5W	100W	99.51W	99.76W	100W	99.16W	100W

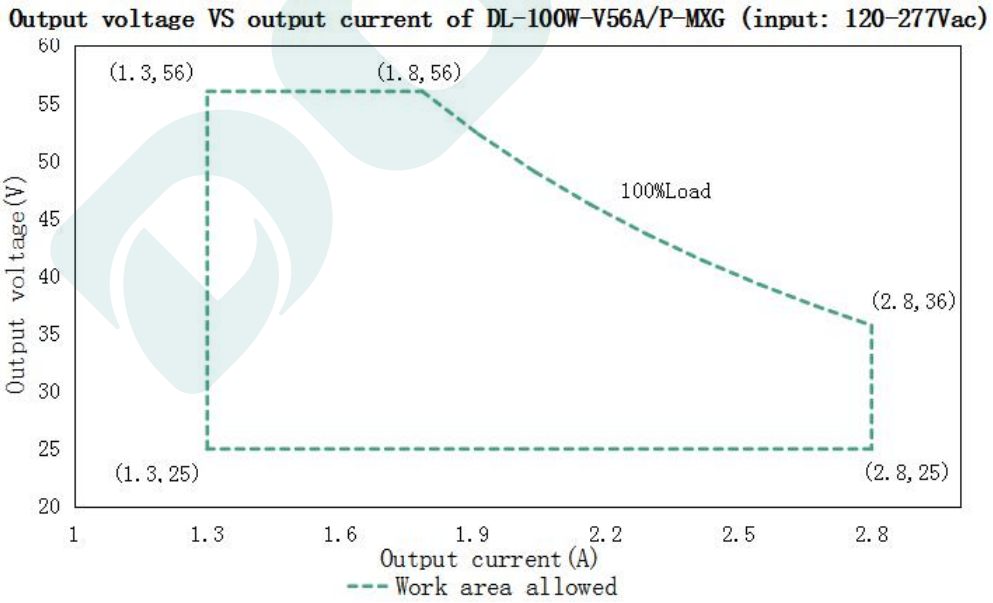

Load	Output								
Load working Voltage	25V	28V	32V	36V	40V	43V	48V	52V	56V
Io_MAX	2.8A	2.8A	2.8A	2.8A	2.5A	2.32A	2.08A	1.92A	1.8A
Po_MAX	70W	78.4W	89.6W	100W	100W	100W	99.84W	99.84W	100W

Eff. VS Output voltage(DL-100W-V143P/A-MXG)

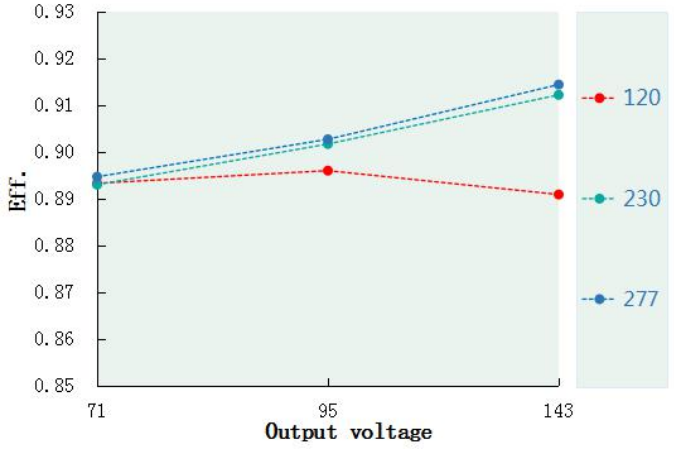

Eff. VS Output voltage(DL-100W-V56P/A-MXG)

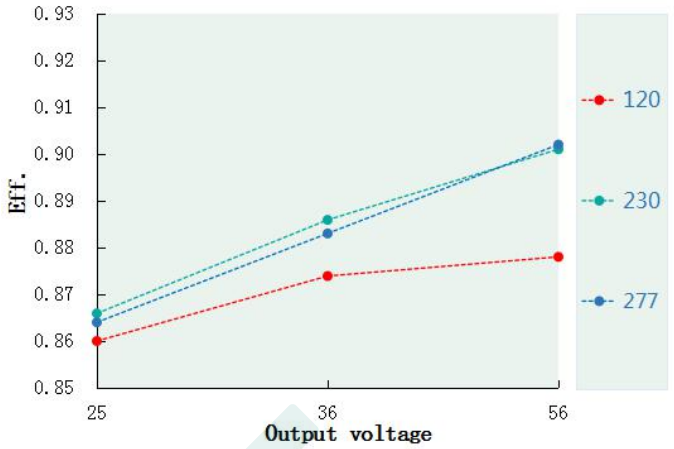

Power factor VS Input voltage(DL-100W-V143P/A-MXG)

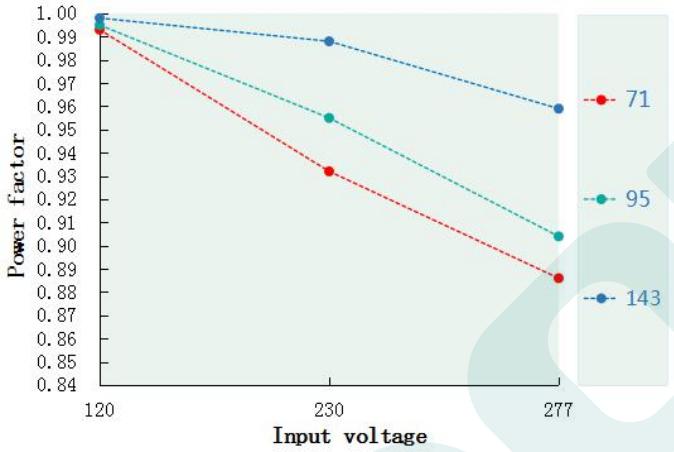

Power factor VS Input voltage(DL-100W-V56P/A-MXG)

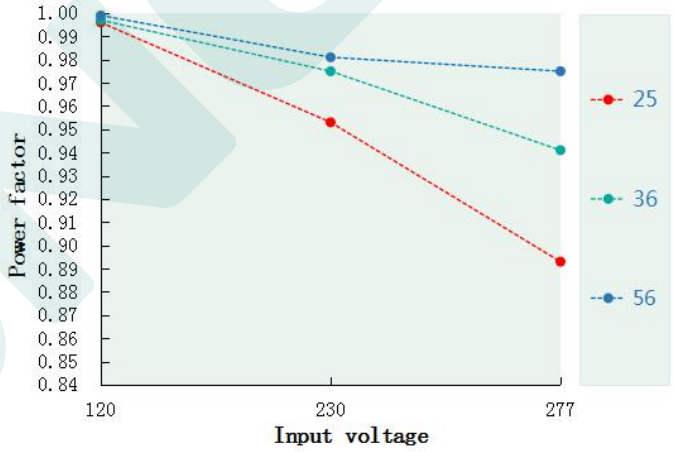

T.H.D. VS Output voltage(DL-100W-V143P/A-MXG)

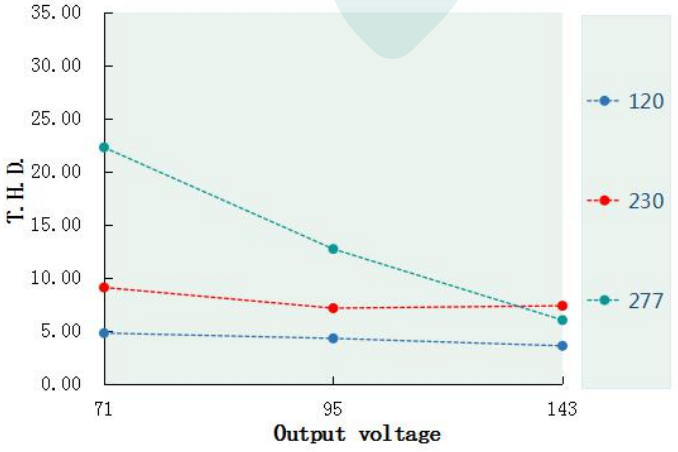

T.H.D. VS Output voltage(DL-100W-V56P/A-MXG)

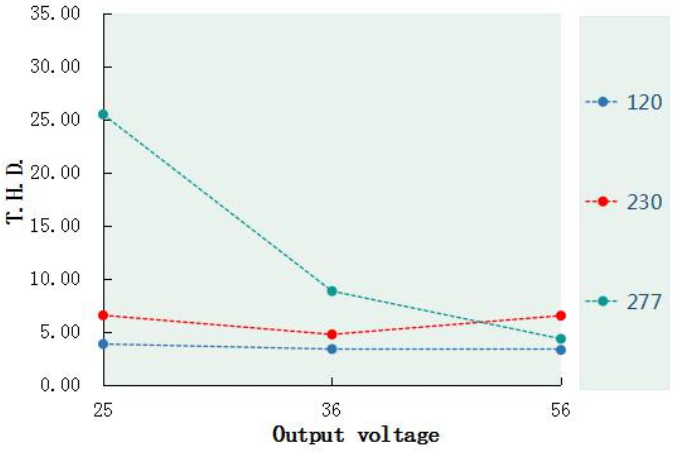

Tcase VS Lifetime (DL-100W-P/A-MXG)

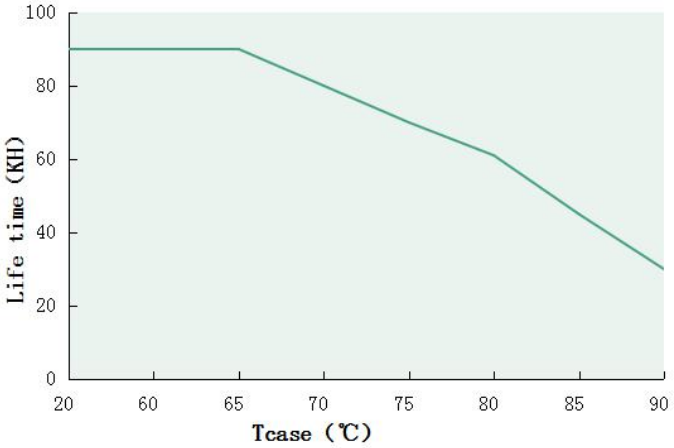

Output power VS Tcase (DL-100W-P/A-MXG)

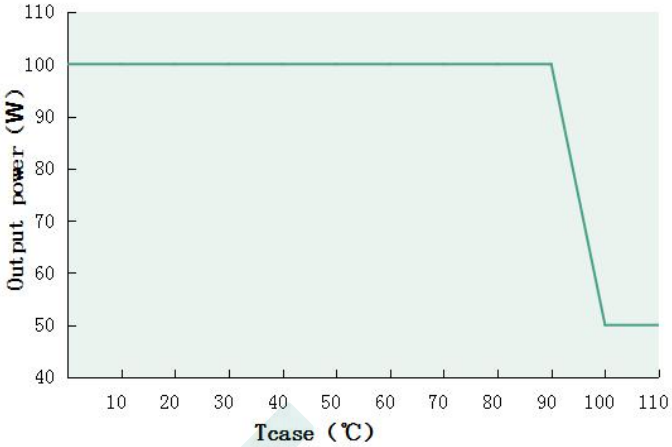

Output power VS Input voltage

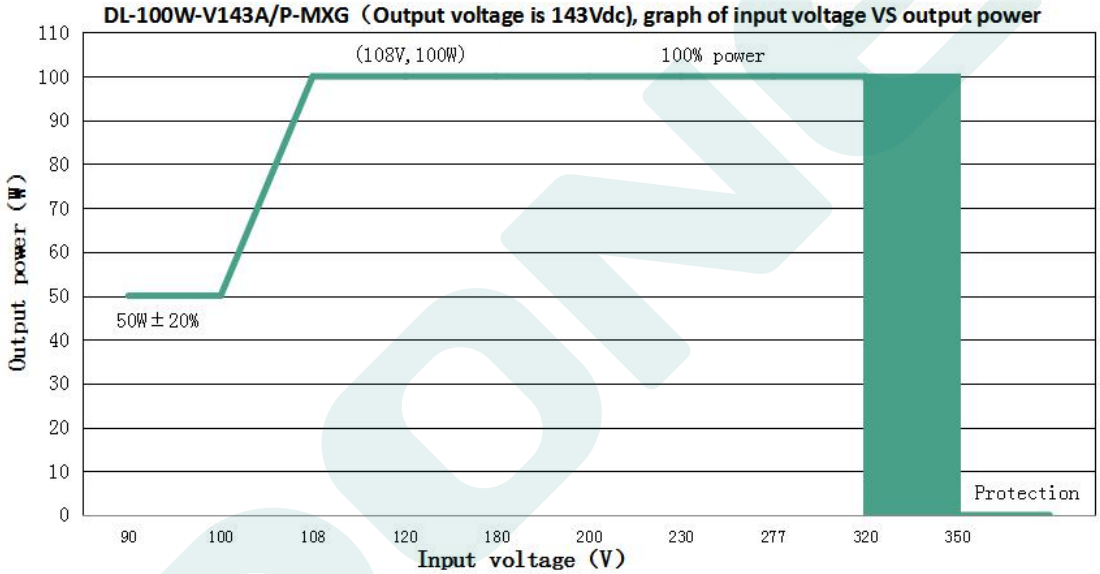

DL-100W-V143P-MXG (When the output voltage is 143Vdc, the rated output current value and output power corresponding to different input voltage)									
Input Voltage	90Vac	95Vac	100Vac	108Vac	120Vac	180Vac	230Vac	277Vac	350Vac
Iout	0.35A	0.35A	0.35A	0.7A	0.7A	0.7A	0.7A	0.7A	0A
Pout	50W	50W	50W	100W	100W	100W	100W	100W	0W

Note:

1.Input voltage will fluctuate,resistance error and other factors.At the decrease or increase of power (Vin=108Vac),it will move left and right,with the range of 108V .

2.When the input voltage is 90-108Vac,the output power range is 50W±20%.

Output power versus Input voltage

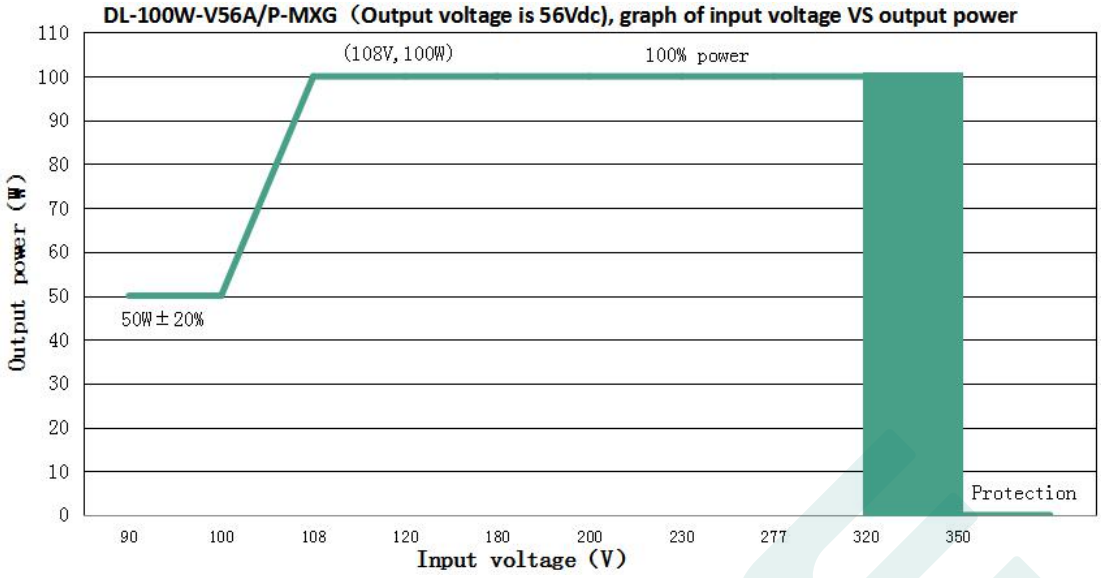

DL-100W-V56P-MXG (When the output voltage is 56Vdc, the rated output current value and output power corresponding to different input voltage)									
Input Voltage	90Vac	95Vac	100Vac	108Vac	120Vac	180Vac	230Vac	277Vac	350Vac
Iout	0.9A	0.9A	0.9A	1.8A	1.8A	1.8A	1.8A	1.8A	0A
Pout	50W	50W	50W	100W	100W	100W	100W	100W	0W

Note:

1.Input voltage will fluctuate,resistance error and other factors.At the decrease or increase of power (Vin=108Vac),it will move left and right,with the range of 108V .

2.When the input voltage is 90-108Vac,the output power range is 50W±20%.

Dimming operation

※ Three-in-one dimming function (P version only)

A. connect a resistor 10-100K or 1-10V DC voltage or 10V PWM signal between DIM+ and DIM- to adjust the output current.

B. output current of dimming port: 100uA (typical value).

◎ With an applied voltage of 1-10V:

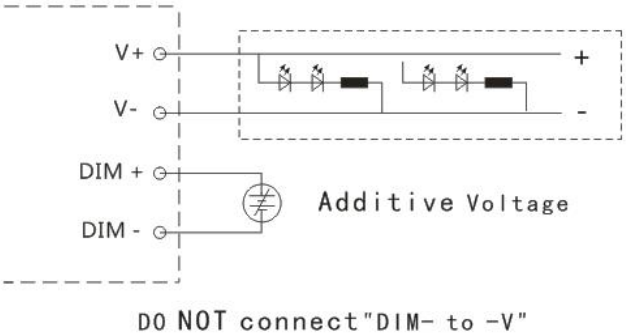

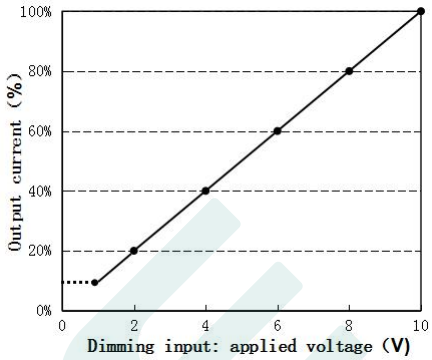

◎ Applying additive 10V PWM signal（Frequency range：300Hz-2K Hz）：

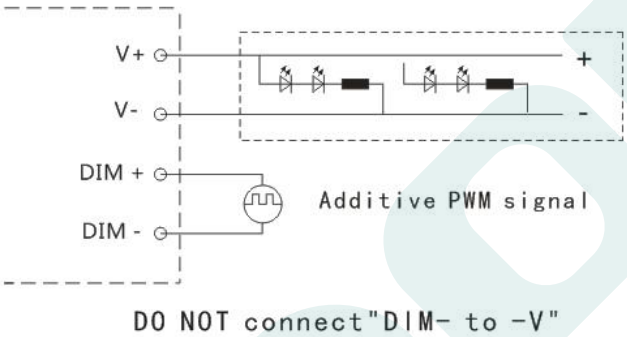

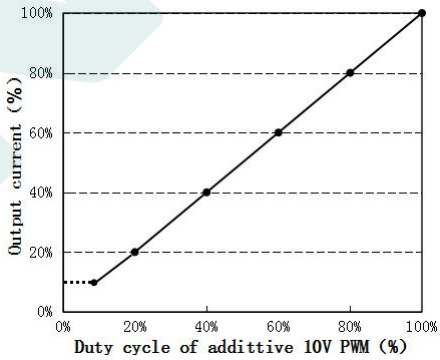

◎ With an additional 10-100K resistor:

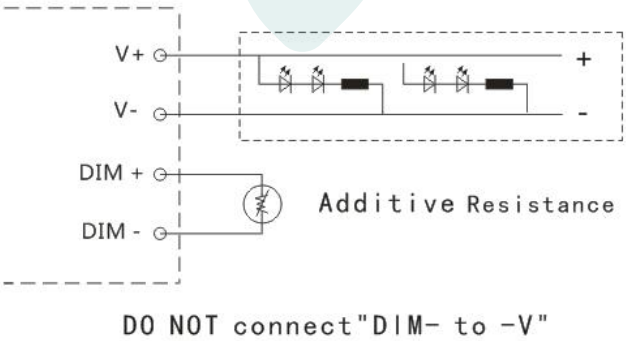

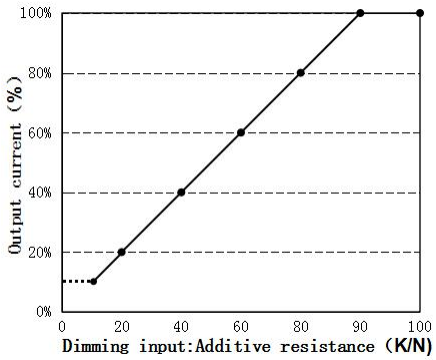

Remark:

When Dimming input is 0V in the constant-power range,the lamp can be dim-to-off.

Mechanical specification

Size（mm）	L153*W63*H32

General product dimension drawing

DL-100W-V56A-MXG

DL-100W-V143A-MXG

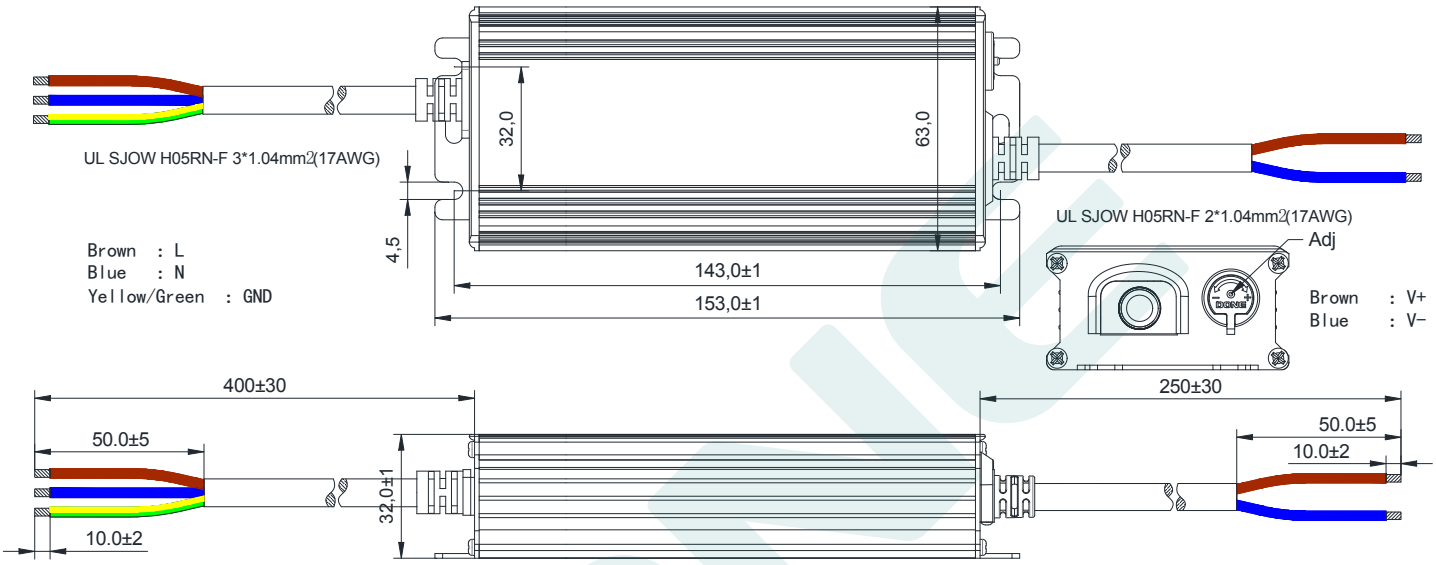

General product dimension drawing

DL-100W-V56P-MXG

DL-100W-V143P-MXG

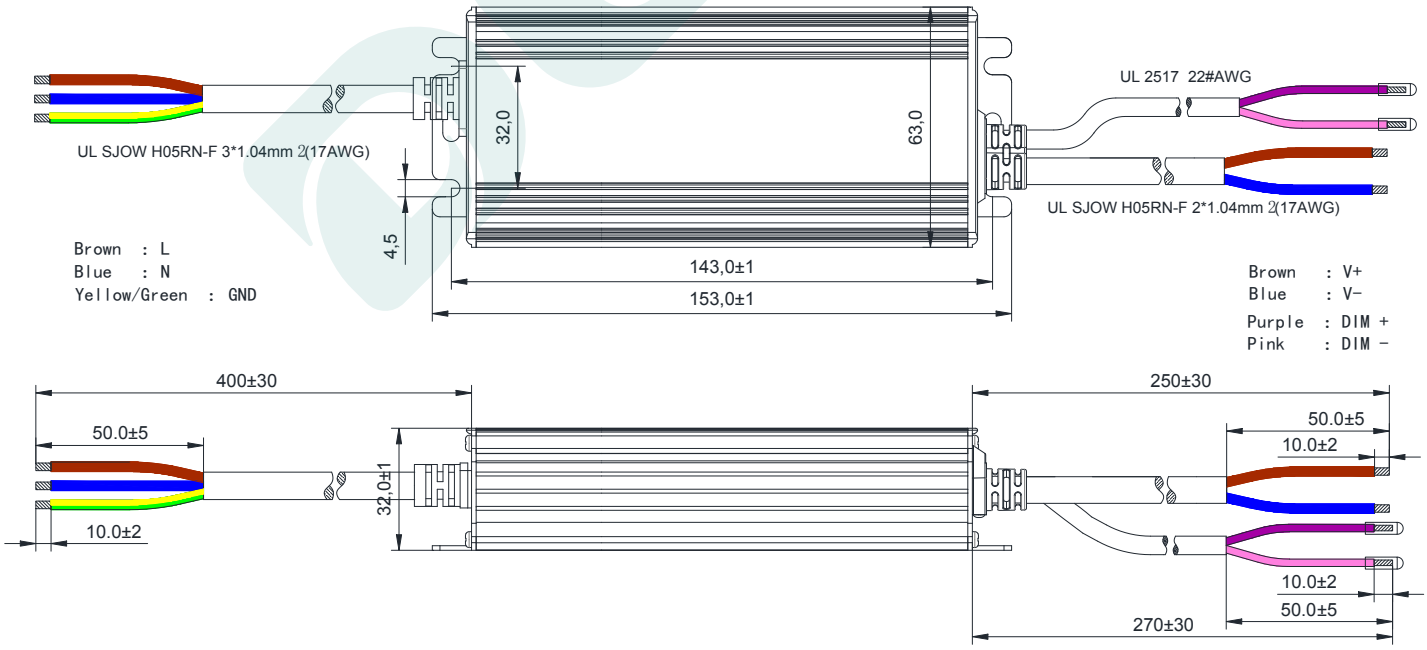

Weight

Weight	545 g

Packaging

Packaging（mm）	L475*W350*H160

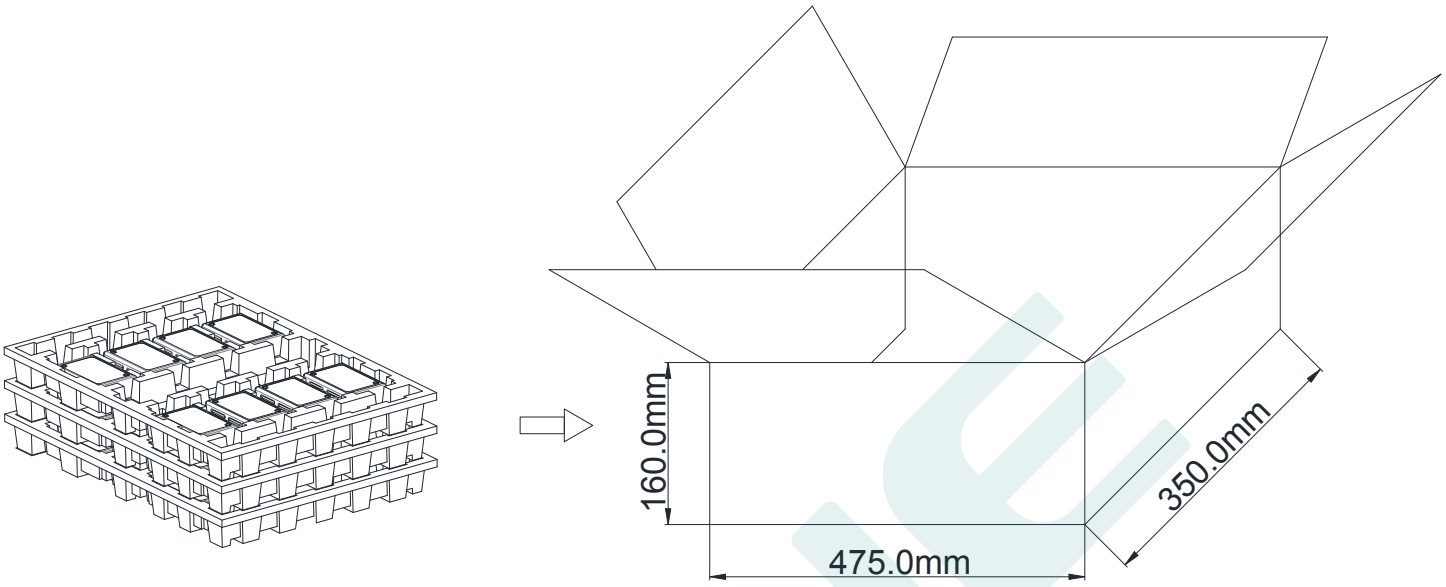

Note：One Carton 3 layers and 8 pcs each layer, total 24pcs/carton.

Note:

1. According to the certificate obtained by the LED DRIVER, the LED DRIVER with the English label is sold in Europe, America and India.
2. The LED DRIVER with Chinese label is only used for China market.

Version

DATE	DESCRIPTION	REV.	CHECK
2021.4.7	Initial version.	V1.0	
2021.12.22	1：Update the output cable 2：Update Input over-voltage protection	V1.1	2021.12.24 16:55:31 +08'00' ZHANGTINGWEI 2021.12.24 17:16:31 +08'00'

MANUFACTRUER		
EDIT	CHECK	APPROVE
XRL 2021.12.24 11:44:21 +08'00'	GZK 2021.12.24 13:32:49 +08'00'	数字签名者：张鸿生 DN：cn=张鸿生, o, ou, email=978425630@qq.com, c=<无 日期：2021.12.24 17:19:26 +08'00'

LUMILEDS

ILLUMINATION

2835R Series

Standard 2835 package to address retrofit applications

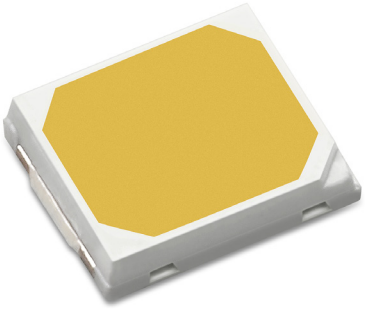

2835R Series is a complementary portfolio with optimized performance and bin construction for the retrofit space. With an industry standard footprint, it provides the perfect balance between performance and cost efficiency for a variety of applications.

FEATURES AND BENEFITS
Flexible voltage configurations to comply with various different system solutions
Industry standard footprint for drop-in replacement designs
High maximum drive current to allow for reduction of LED count

PRIMARY APPLICATIONS
Downlights
High Bay and Low Bay
Indoor Area Lighting
Lamps

 ©2018 Lumileds Holding B.V. All rights reserved.

No. E352519

Table of Contents

 ©2018 Lumileds Holding B.V. All rights reserved.

General Product Information

Product Test Conditions

The 2835R Series LEDs are tested and binned with a 20ms monopulse of rated current at a junction temperature, T_j, of 25°C.

Part Number Nomenclature

Part numbers for the 2835R Series follow the convention below:

L 1 2 8 – **A A B B** R **C** 3 5 0 0 **D D D**

Where:

A A	–	designates nominal CCT (27=2700K, 30=3000K, 35=3500K, 40=4000K, 50=5000K, 57=5700K, 65=6500K)
B B	–	designates nominal CRI (70=70CRI, 75=75CRI, 80=80CRI and 90=90CRI)
C	–	designates voltage (A=3V, B=6V, C=9V, D=18V, E=36V)
D D D	–	designates Lumileds internal code (0A1, 0B1, 0C1, 0D1, 0E1, etc.=shares the same base part)

Therefore, the following part number is used for a 2835R 3000K, 80CRI, 36V LED:

L 1 2 8 – **3 0 8 0** R **E** 3 5 0 0 **0 A 1**

Lumen Maintenance

Please contact your local Sales Representative or Lumileds Technical Solutions Manager for more information about the long-term performance of this product.

Environmental Compliance

Lumileds LLC is committed to providing environmentally friendly products to the solid-state lighting market. The 2835R Series is compliant to the European Union directives on the restriction of hazardous substances in electronic equipment, namely the RoHS Directive 2011/65/EU and REACH Regulation (EC) 1907/2006. Lumileds LLC will not intentionally add the following restricted materials to its products: lead, mercury, cadmium, hexavalent chromium, polybrominated biphenyls (PBB) or polybrominated diphenyl ethers (PBDE).

 ©2018 Lumileds Holding B.V. All rights reserved.

Performance Characteristics

Product Selection Guide

Table 1a. Product flux performance of 2835R Series at rated current, T_j=25°C.

PRODUCT	NOMINAL CCT	MINIMUM CRI [1]	RATED CURRENT (mA)	LUMINOUS FLUX [1] (lm)		TYPICAL LUMINOUS EFFICACY (lm/W)	PART NUMBER
				MINIMUM	TYPICAL		
2835R 3V	2700K	80	60	21.0	24.0	129.0	L128-2780RA35000A1
	3000K	80	60	21.5	24.5	131.7	L128-3080RA35000A1
	3500K	80	60	22.0	25.0	134.4	L128-3580RA35000A1
	4000K	80	60	23.0	26.5	142.5	L128-4080RA35000A1
	5000K	80	60	23.0	26.5	142.5	L128-5080RA35000A1
	5700K	80	60	23.0	26.5	142.5	L128-5780RA35000A1
	6500K	80	60	23.0	26.5	142.5	L128-6580RA35000A1
2835R 6V	2700K	80	150	98	111	119	L128-2780RB35000A1
	3000K	80	150	100	114	123	L128-3080RB35000A1
	3500K	80	150	103	117	126	L128-3580RB35000A1
	4000K	80	150	108	123	132	L128-4080RB35000A1
	5000K	80	150	108	123	132	L128-5080RB35000A1
	5700K	80	150	108	123	132	L128-5780RB35000A1
	6500K	80	150	108	123	132	L128-6580RB35000A1
2835R 9V	2700K	75	100	115	129	142	L128-2775RC35000A1
	3000K	75	100	115	130	143	L128-3075RC35000A1
	3500K	75	100	117	133	146	L128-3575RC35000A1
	4000K	75	100	120	136	149	L128-4075RC35000A1
	5000K	75	100	120	136	149	L128-5075RC35000A1
	5700K	75	100	120	136	149	L128-5775RC35000A1
	6500K	75	100	120	136	149	L128-6575RC35000A1
	2700K	80	100	105	120	132	L128-2780RC35000A1
	3000K	80	100	108	123	135	L128-3080RC35000A1
	3500K	80	100	110	126	138	L128-3580RC35000A1
	4000K	80	100	115	132	145	L128-4080RC35000A1
	5000K	80	100	115	132	145	L128-5080RC35000A1
	5700K	80	100	115	132	145	L128-5780RC35000A1
	6500K	80	100	115	132	145	L128-6580RC35000A1

Table 1a continued on next page.

1. Lumileds maintains a tolerance of ±2 on CRI and ±5% on luminous flux measurements.

 ©2018 Lumileds Holding B.V. All rights reserved.

Table 1a. Product flux performance of 2835R Series at rated current, T_j=25°C (continued).

PRODUCT	NOMINAL CCT	MINIMUM CRI [1]	RATED CURRENT (mA)	LUMINOUS FLUX [1] (lm)		TYPICAL LUMINOUS EFFICACY (lm/W)	PART NUMBER
				MINIMUM	TYPICAL		
2835R 9V	2700K	80	100	108	123	135	L128-2780RC35000B1
	3000K	80	100	110	125	137	L128-3080RC35000B1
	3500K	80	100	115	129	142	L128-3580RC35000B1
	4000K	80	100	120	135	148	L128-4080RC35000B1
	5000K	80	100	120	135	148	L128-5080RC35000B1
	5700K	80	100	120	135	148	L128-5780RC35000B1
	6500K	80	100	120	135	148	L128-6580RC35000B1
	2700K	90	100	90	102	112	L128-2790RC35000B1
	3000K	90	100	92	104	114	L128-3090RC35000B1
	3500K	90	100	93	105	115	L128-3590RC35000B1
	4000K	90	100	100	113	124	L128-4090RC35000B1
	5000K	90	100	100	113	124	L128-5090RC35000B1
	5700K	90	100	100	113	124	L128-5790RC35000B1
	6500K	90	100	100	113	124	L128-6590RC35000B1
2835R 9V	2700K	75	60	59	67	124	L128-2775RC35000C1
	3000K	75	60	60	67	124	L128-3075RC35000C1
	3500K	75	60	60	69	128	L128-3575RC35000C1
	4000K	75	60	63	71	131	L128-4075RC35000C1
	5000K	75	60	63	71	131	L128-5075RC35000C1
	5700K	75	60	63	71	131	L128-5775RC35000C1
	6500K	75	60	63	71	131	L128-6575RC35000C1
	2700K	80	60	55	62	115	L128-2780RC35000C1
	3000K	80	60	56	64	119	L128-3080RC35000C1
	3500K	80	60	57	66	122	L128-3580RC35000C1
	4000K	80	60	60	70	130	L128-4080RC35000C1
	5000K	80	60	60	70	130	L128-5080RC35000C1
	5700K	80	60	60	70	130	L128-5780RC35000C1
	6500K	80	60	60	70	130	L128-6580RC35000C1
2835R 18V	2700K	70	50	117	133	123	L128-2770RD35000A1
	3000K	70	50	118	134	124	L128-3070RD35000A1
	3500K	70	50	120	137	127	L128-3570RD35000A1
	4000K	70	50	128	145	134	L128-4070RD35000A1
	5000K	70	50	128	145	134	L128-5070RD35000A1
	5700K	70	50	128	145	134	L128-5770RD35000A1
	6500K	70	50	128	145	134	L128-6570RD35000A1
	2700K	80	60	123	140	130	L128-2780RD35000A1
	3000K	80	60	126	143	132	L128-3080RD35000A1
	3500K	80	60	130	146	135	L128-3580RD35000A1
	4000K	80	60	135	155	144	L128-4080RD35000A1
	5000K	80	60	135	155	144	L128-5080RD35000A1
	5700K	80	60	135	155	144	L128-5780RD35000A1
	6500K	80	60	135	155	144	L128-6580RD35000A1

Table 1a continued on next page.

1. Lumileds maintains a tolerance of ±2 on CRI and ±5% on luminous flux measurements.

 ©2018 Lumileds Holding B.V. All rights reserved.

Table 1a. Product flux performance of 2835R Series at rated current, T_j=25°C (continued).

PRODUCT	NOMINAL CCT	MINIMUM CRI [1]	RATED CURRENT (mA)	LUMINOUS FLUX [1] (lm)		TYPICAL LUMINOUS EFFICACY (lm/W)	PART NUMBER
				MINIMUM	TYPICAL		
2835R 18V	2700K	70	60	126	143	132	L128-2770RD35000B1
	3000K	70	60	127	145	134	L128-3070RD35000B1
	3500K	70	60	130	147	136	L128-3570RD35000B1
	4000K	70	60	135	152	141	L128-4070RD35000B1
	5000K	70	60	135	152	141	L128-5070RD35000B1
	5700K	70	60	135	152	141	L128-5770RD35000B1
	6500K	70	60	135	152	141	L128-6570RD35000B1
	2700K	80	60	110	126	117	L128-2780RD35000B1
	3000K	80	60	113	129	119	L128-3080RD35000B1
	3500K	80	60	116	132	122	L128-3580RD35000B1
	4000K	80	60	122	139	129	L128-4080RD35000B1
	5000K	80	60	122	139	129	L128-5080RD35000B1
	5700K	80	60	122	139	129	L128-5780RD35000B1
	6500K	80	60	122	139	129	L128-6580RD35000B1
2835R 36V	2700K	80	30	125	140	130	L128-2780RE35000A1
	3000K	80	30	128	143	132	L128-3080RE35000A1
	3500K	80	30	130	146	135	L128-3580RE35000A1
	4000K	80	30	135	155	144	L128-4080RE35000A1
	5000K	80	30	135	155	144	L128-5080RE35000A1
	5700K	80	30	135	155	144	L128-5780RE35000A1
	6500K	80	30	135	155	144	L128-6580RE35000A1

Notes for Table 1a:
1. Lumileds maintains a tolerance of ±2 on CRI and ±5% on luminous flux measurements.

 ©2018 Lumileds Holding B.V. All rights reserved.

Table 1b. Product efficacy performance of 2835R Series at rated current, T_j=25°C (continued).

PRODUCT	NOMINAL CCT	MINIMUM CRI [1]	RATED CURRENT (mA)	LUMINOUS EFFICACY [1] (lm)			PART NUMBER
				MINIMUM	TYPICAL	MAXIMUM	
2835R 3V	2700K	80	42	162	171	190	L128-2780RA35000B1
	3000K	80	42	171	181	210	L128-3080RA35000B1
	3500K	80	42	171	181	210	L128-3580RA35000B1
	4000K	80	42	181	190	210	L128-4080RA35000B1
	4500K	80	42	181	190	210	L128-4580RA35000B1
	5000K	80	42	181	190	210	L128-5080RA35000B1
	5700K	80	42	181	190	210	L128-5780RA35000B1
	6500K	80	42	181	190	210	L128-6580RA35000B1
	2700K	80	42	167	176	196	L128-2780RA35000E1
	3000K	80	42	176	186	210	L128-3080RA35000E1
	3500K	80	42	176	186	210	L128-3580RA35000E1
	4000K	80	42	186	196	210	L128-4080RA35000E1
	4500K	80	42	186	196	210	L128-4580RA35000E1
	5000K	80	42	186	196	210	L128-5080RA35000E1
	5700K	80	42	186	196	210	L128-5780RA35000E1
	6500K	80	42	186	196	210	L128-6580RA35000E1
	2700K	80	42	156	164	182	L128-2780RA35000C1
	3000K	80	42	164	173	210	L128-3080RA35000C1
	3500K	80	42	164	173	210	L128-3580RA35000C1
	4000K	80	42	173	182	210	L128-4080RA35000C1
	4500K	80	42	173	182	210	L128-4580RA35000C1
	5000K	80	42	173	182	210	L128-5080RA35000C1
	5700K	80	42	173	182	210	L128-5780RA35000C1
	6500K	80	42	173	182	210	L128-6580RA35000C1
	2700K	80	42	143	151	168	L128-2780RA35000D1
	3000K	80	42	151	159	185	L128-3080RA35000D1
	3500K	80	42	151	159	185	L128-3580RA35000D1
	4000K	80	42	159	168	185	L128-4080RA35000D1
	4500K	80	42	159	168	185	L128-4580RA35000D1
	5000K	80	42	159	168	185	L128-5080RA35000D1
	5700K	80	42	159	168	185	L128-5780RA35000D1
	6500K	80	42	159	168	185	L128-6580RA35000D1

Notes for Table 1b:
1. Lumileds maintains a tolerance of ±2 on CRI and ±5% on luminous efficacy measurements.

Optical Characteristics

Table 2. Optical characteristics for 2835R Series at rated current, T_j=25°C.

PART NUMBER	TYPICAL TOTAL INCLUDED ANGLE [1]	TYPICAL VIEWING ANGLE [2]
L128-xxxxRx35000x1	160°	120°

Notes for Table 2:
1. Total angle at which 90% of total luminous flux is captured.
2. Viewing angle is the off axis angle from the LED centerline where the luminous intensity is ½ of the peak value.

 ©2018 Lumileds Holding B.V. All rights reserved.

Electrical and Thermal Characteristics

Table 3. Electrical and thermal characteristics for 2835R Series at rated current, T_j=25°C.

PART NUMBER	FORWARD VOLTAGE [1] (V_f)		
	MINIMUM	TYPICAL	MAXIMUM
L128-xxxxRA35000A1	2.8	3.1	3.3
L128-xxxxRA35000B1	2.6	2.8	3.0
L128-xxxxRA35000C1	2.6	2.8	3.0
L128-xxxxRA35000D1	2.6	2.8	3.0
L128-xxxxRA35000E1	2.6	2.8	3.0
L128-xxxxRB35000A1	5.8	6.2	6.6
L128-xxxxRC35000A1	8.6	9.1	9.6
L128-xxxxRC35000B1	8.6	9.1	9.6
L128-xxxxRC35000C1	8.6	9.0	9.6
L128-xxxxRD35000A1	16.5	18.0	19.5
L128-xxxxRD35000B1	16.5	18.0	19.5
L128-xxxxRE35000A1	34.0	36.0	38.0

Notes for Table 3:
1. Lumileds maintains a tolerance of ±0.05V on forward voltage measurements.

Absolute Maximum Ratings

Table 4. Absolute maximum ratings for 2835R Series.

PARAMETER	MAXIMUM PERFORMANCE
DC Forward Current	80mA for L128-xxxxRA35000A1 150mA for L128-xxxxRA35000B1 150mA for L128-xxxxRA35000C1 80mA for L128-xxxxRA35000D1 150mA for L128-xxxxRA35000E1 150mA for L128-xxxxRB35000A1 100mA for L128-xxxxRC35000A1 100mA for L128-xxxxRC35000B1 60mA for L128-xxxxRC35000C1 60mA for L128-xxxxRD35000A1 60mA for L128-xxxxRD35000B1 30mA for L128-xxxxRE35000A1
ESD Sensitivity (HBM)	1000V
LED Junction Temperature	125°C for
LED Storage Temperature	-40°C to 105°C -35°C to 85°C
Case Temperture	105°C
Reverse Current (25°C, 5V reverse bias)	10μA

 ©2018 Lumileds Holding B.V. All rights reserved.

Characteristics Curves

Light Output Characteristics

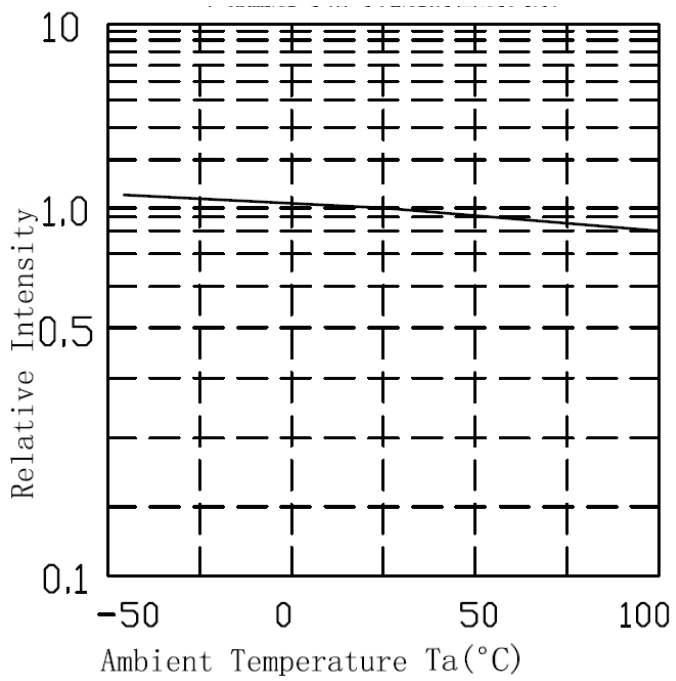

Figure 1. Typical normalized light output vs. ambient temperature for L128-xxxxRx35000x1 at rated current.

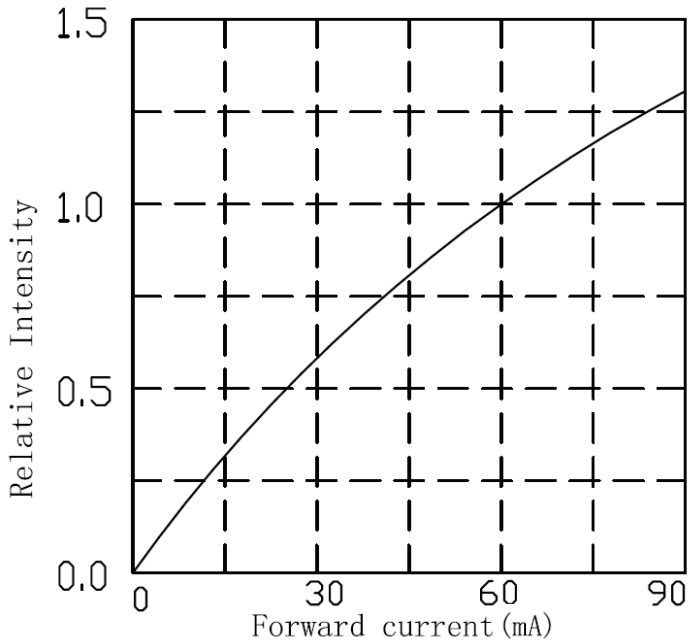

Figure 2a. Typical normalized light output vs. forward current for L128-xxxxRA35000A1 and L128-xxxxRC35000C1 at T_j=25°C.

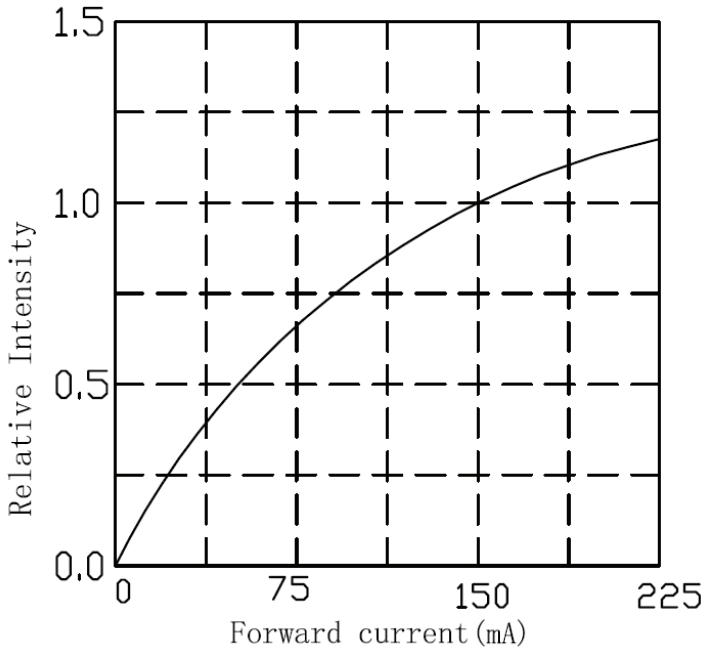

Figure 2b. Typical normalized light output vs. forward current for L128-xxxxRB35000A1 at T_j=25°C.

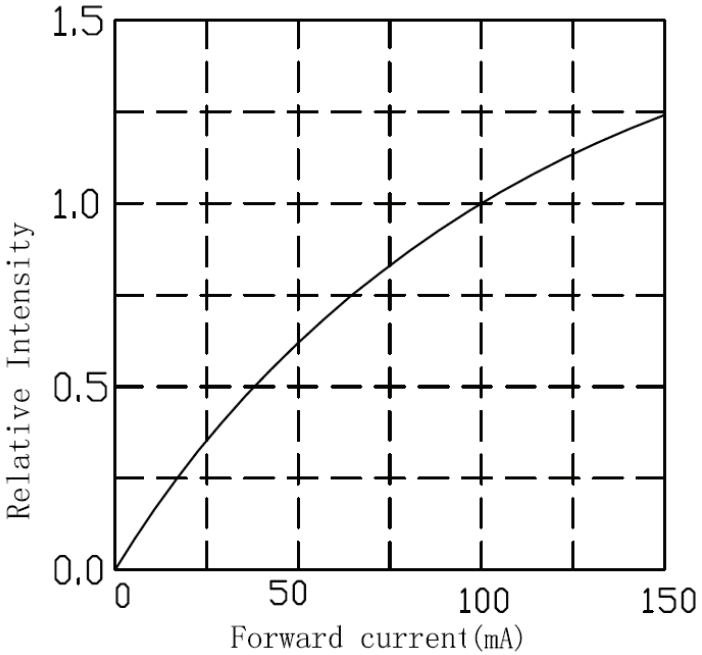

Figure 2c. Typical normalized light output vs. forward current for L128-xxxxRC35000A1 and L128-xxxxRC35000B1 at T_j=25°C.

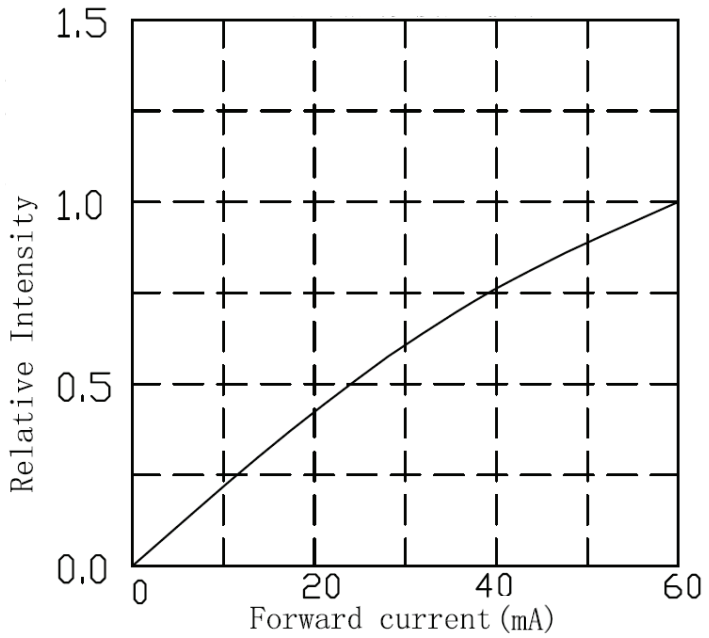

Figure 2d. Typical normalized light output vs. forward current for L128-xxxxRD35000A1 at T_j=25°C.

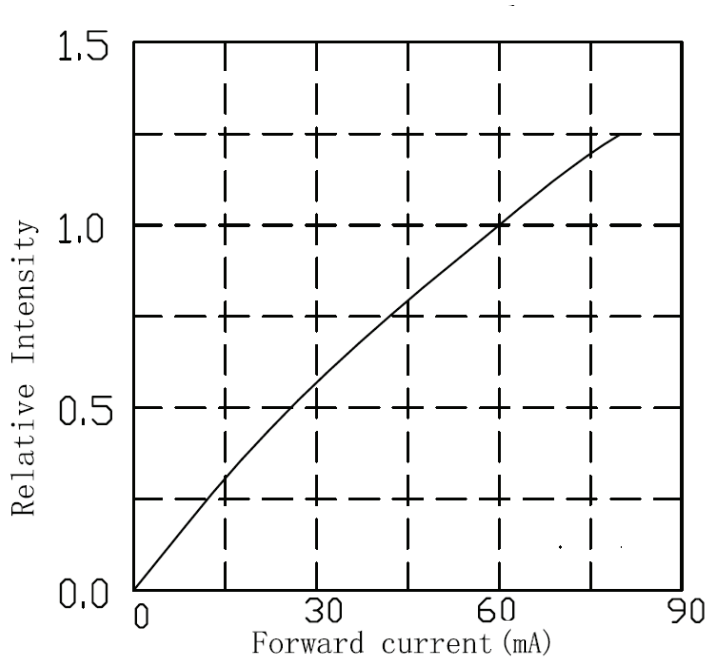

Figure 2e. Typical normalized light output vs. forward current for L128-xxxxRD35000B1 at T_j=25°C.

 ©2018 Lumileds Holding B.V. All rights reserved.

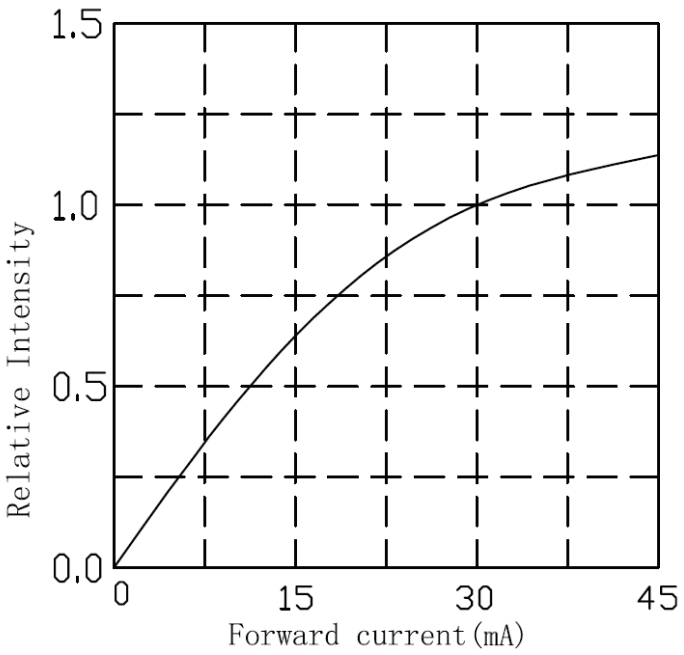

Figure 2f. Typical normalized light output vs. forward current for L128-xxxxRE35000A1 at T_j=25°C.

Forward Current Characteristics

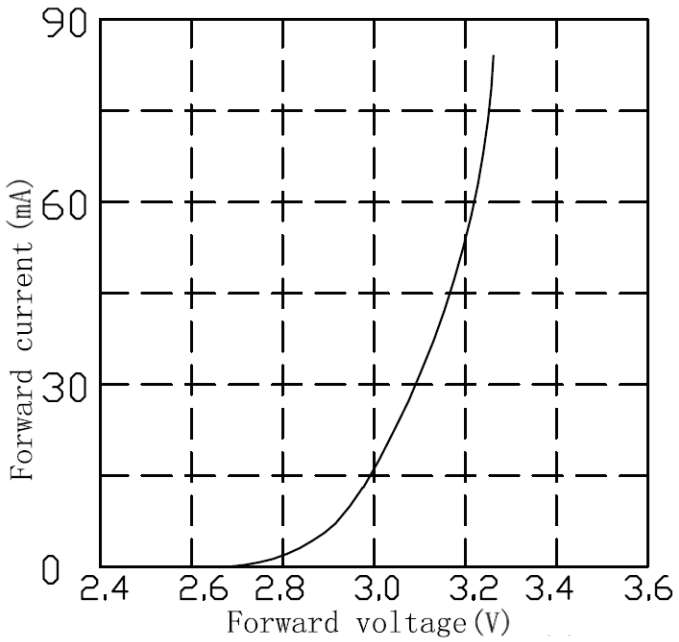

Figure 3a. Typical forward current vs. forward voltage for L128-xxxxRA35000A1 at T_j=25°C.

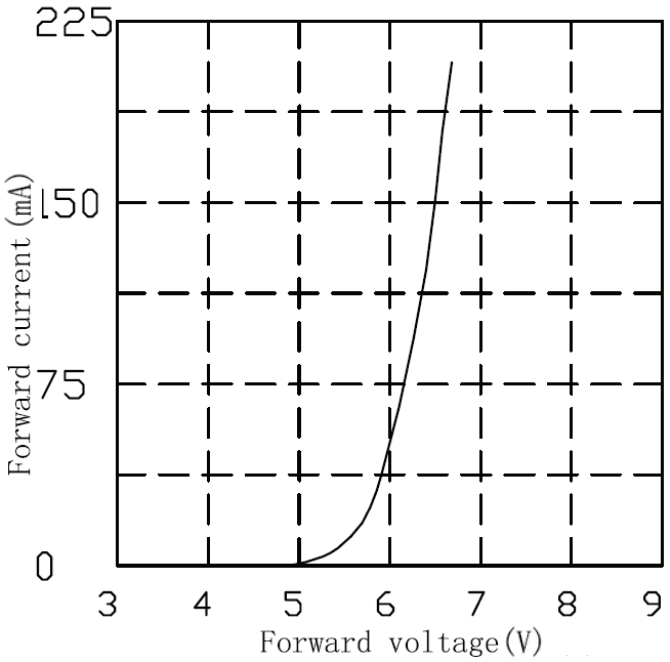

Figure 3b. Typical forward current vs. forward voltage for L128-xxxxRB35000A1 at T_j=25°C.

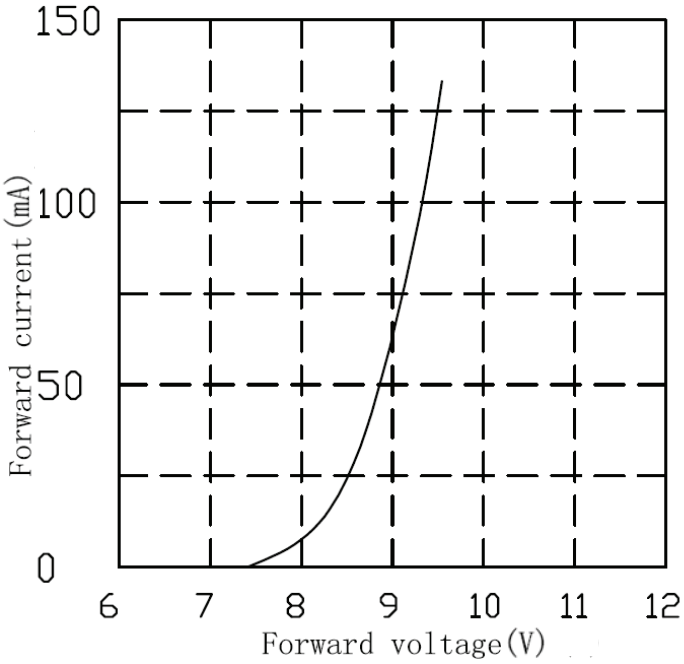

Figure 3c. Typical forward current vs. forward voltage for L128-xxxxRC35000A1 and L128-xxxxRC35000B1 at T_j=25°C.

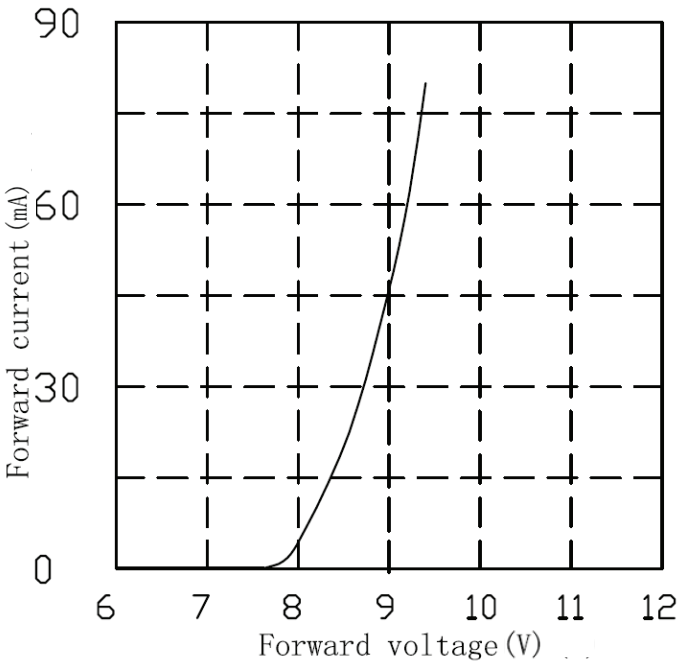

Figure 3d. Typical forward current vs. forward voltage for L128-xxxxRC35000C1 at T_j=25°C.

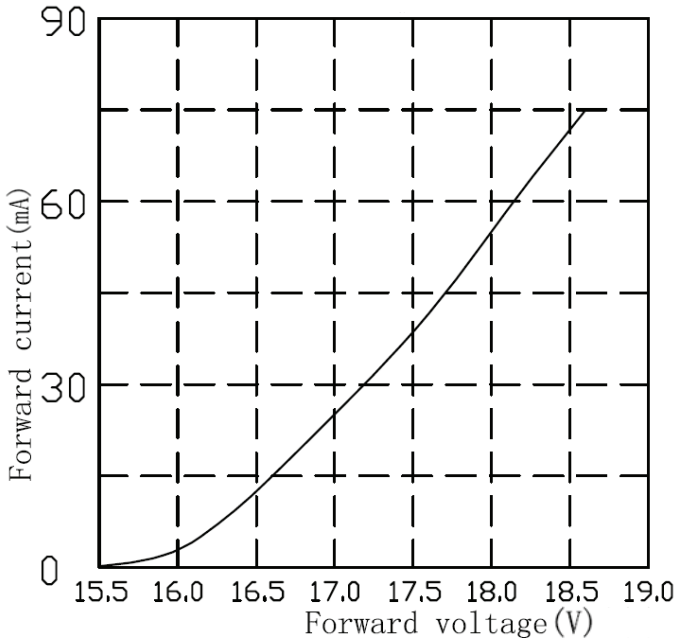

Figure 3e. Typical forward current vs. forward voltage for L128-xxxxRD35000A1 and L128-xxxxRD35000B1 at T_j=25°C.

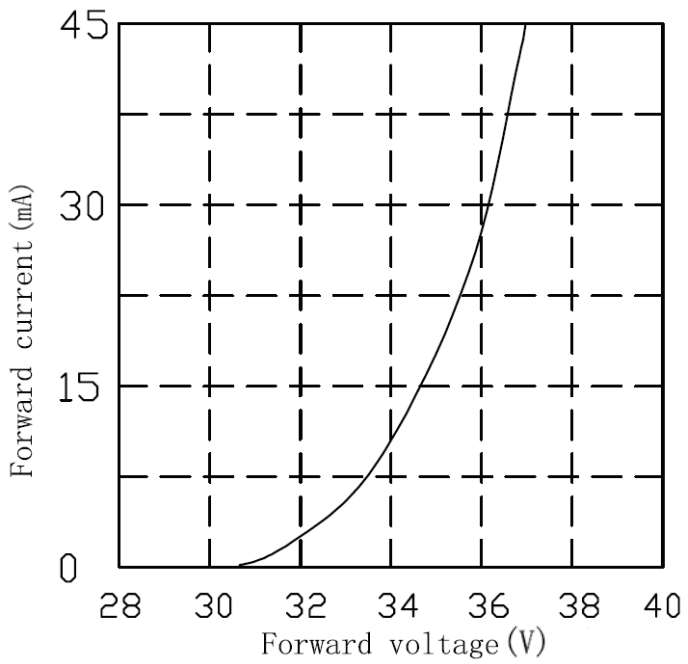

Figure 3f. Typical forward current vs. forward voltage for L128-xxxxRE35000A1 at T_j=25°C.

Radiation Pattern Characteristics

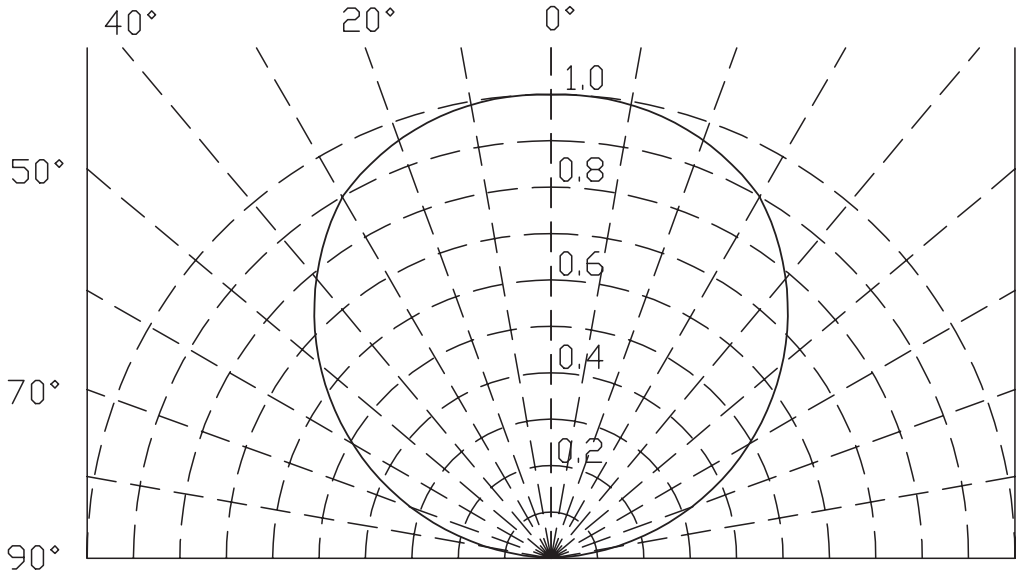

Figure 4. Typical polar radiation pattern for 2835R Series at rated current, T_j=25°C.

Product Bin and Labeling Definitions

Decoding Product Bin Labeling

In the manufacturing of semiconductor products, there are variations in performance around the average values given in the technical datasheet. For this reason, Lumileds bins LED components for luminous flux or luminous efficacy, radiometric power, color point, peak or dominant wavelength, and forward voltage.

2835R Series L128-xxxxRA35000B1, L128-xxxxRA35000C1, L128-xxxxRA35000D1, and L128-xxxxRA35000E1 are labeled using a 5-digit alphanumeric CAT code following the format below:

Where:

A B C D E

A B – designates luminous efficacy bin (example: BN=162 to 171 lumens, AK=196 to 210 lumens)

C D E – designates correlated color temperature bin (example: 652, 65a, 65b, 65c, 65d, 65e, 65f, 65g, 65h, 65i, 65j for 6500K parts)

Therefore, a 2835R LED with a luminous efficacy range of 162 to 171, color bin of 652 has the following CAT code:

B N 6 5 2

All other 2835R Series LEDs are labeled using a 5-digit alphanumeric CAT code following the format below:

Where:

A B C D E

A – designates luminous flux bin (example: B=95 to 100 lumens, G=140 to 150 lumens)

B C D – designates correlated color temperature bin (example: A27, A30, A35, A40, A50, A57, A65)

E – designates forward voltage bin (example: B=34.5 to 35.0V, H=37.5 to 38.0V)

Therefore, a 2835R 36V LED with a luminous flux range of 95 to 100, color bin of A35 and a forward voltage range of 37.5 to 38.0V has the following CAT code:

B A 3 5 H

 ©2018 Lumileds Holding B.V. All rights reserved.

Luminous Flux Bins

Table 5 lists the standard luminous flux bins for 2835R Series emitters. Although several bins are outlined, product availability in a particular bin varies by production run and by product performance. Not all bins are available in all CCTs.

Table 5. Luminous flux bin definitions for 2835R Series at rated current, T_j=25°C.

PRODUCT	BIN	LUMINOUS FLUX [1] (lm)	
		MINIMUM	MAXIMUM
L128-xxxxRA35000A1	A	17	19
	B	19	21
	C	21	23
	D	23	25
	E	25	28
	F	28	32
	G	32	36
	H	36	40
	J	40	45
L128-xxxxRB35000A1 L128-xxxxRC35000A1 L128-xxxxRC35000B1 L128-xxxxRD35000A1 L128-xxxxRD35000B1 L128-xxxxRE35000A1	A	90	95
	B	95	100
	C	100	110
	D	110	120
	E	120	130
	F	130	140
	G	140	150
	H	150	160
	J	160	180
L128-xxxxRC35000C1	A	40	45
	B	45	50
	C	50	55
	D	55	60
	E	60	65
	F	65	70
	G	70	75
	H	75	80

Notes for Table 5:
1. Lumileds maintains a tolerance of ±5% on luminous flux measurements.

 ©2018 Lumileds Holding B.V. All rights reserved.

Luminous Efficacy Bins

Table 6. Luminous flux bin definitions for 2835R Series at rated current, T_j=25°C.

PRODUCT	BIN	LUMINOUS EFFICACY [1] (lm)	
		MINIMUM	MAXIMUM
L128-xxxxRA35000B1	BN	162	171
	BG	171	181
	BH	181	190
	BK	190	210
L128-xxxxRA35000E1	AL	167	176
	AH	176	186
	AJ	186	196
	AK	196	210
L128-xxxxRA35000C1	BP	156	164
	BQ	164	173
	BR	173	182
	BS	182	210
L128-xxxxRA35000D1	BL	143	151
	BA	151	159
	BB	159	168
	BC	168	185

Notes for Table 6:
1. Lumileds maintains a tolerance of ±5% on luminous efficacy measurements.

 ©2018 Lumileds Holding B.V. All rights reserved.

Color Bin Definition

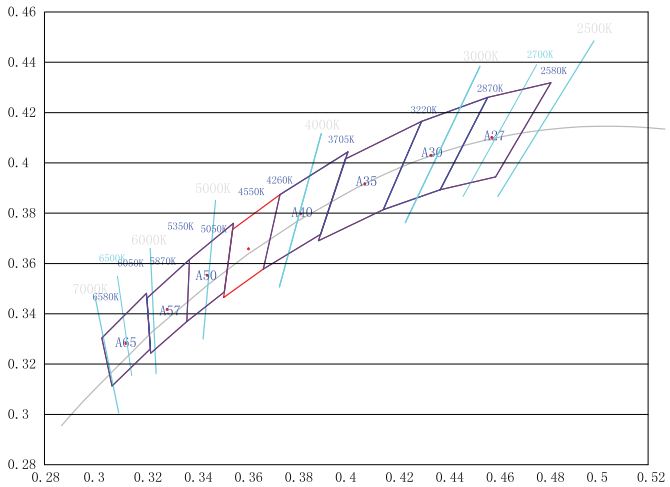

Figure 5a. Color bin struture for 2835R Series for Table 7a.

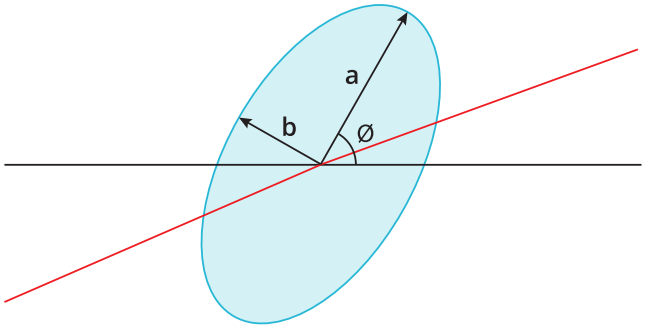

Figure 5b. 3- and 5-step MacAdam ellipse illustration for Tables 7a–7i..

Table 7a. Correlated color temperature bin definitions for 2835R Series at rated current, T_j=25°C

BIN	NOMINAL CCT	POINT	x	y
A27	2700K	1	0.4813	0.4319
		2	0.4562	0.4260
		3	0.4373	0.3893
		4	0.4593	0.3944
A30	3000K	1	0.4562	0.4260
		2	0.4299	0.4165
		3	0.4147	0.3814
		4	0.4373	0.3893
A35	3500K	1	0.4299	0.4165
		2	0.3996	0.4015
		3	0.3889	0.3690
		4	0.4147	0.3814
A40	4000K	1	0.4005	0.4044
		2	0.3736	0.3874
		3	0.3670	0.3578
		4	0.3897	0.3716
A50	5000K	1	0.3551	0.3760
		2	0.3376	0.3616
		3	0.3366	0.3369
		4	0.3515	0.3487
A57	5700K	1	0.3376	0.3616
		2	0.3207	0.3462
		3	0.3222	0.3243
		4	0.3366	0.3369
A65	6500K	1	0.3206	0.3482
		2	0.3028	0.3304
		3	0.3068	0.3113
		4	0.3221	0.3261

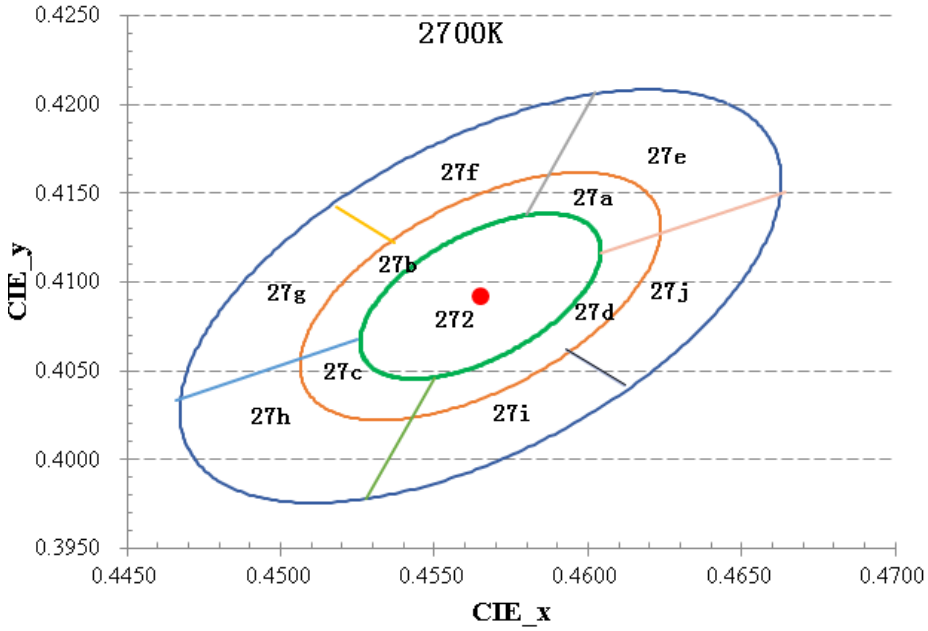

Figure 6a. Color bin structure for 2835R Series 2700K.

Table 7b. Color bin definitions for 2835R Series 2700K, at rated current, T_j=25°C.

NOMINAL CCT	POINT	X	y	POINT	X	y
2700K	1	0.4580	0.4138	7	0.4550	0.4046
	2	0.4602	0.4207	8	0.4528	0.3978
	3	0.4537	0.4122	9	0.4593	0.4062
	4	0.4518	0.4142	10	0.4612	0.4042
	5	0.4525	0.4068	11	0.4604	0.4116
	6	0.4466	0.4033	12	0.4664	0.4151
	COLOR SPACE	**CENTER Cx**	**CENTER Cy**	**MAJOR AXIS, a**	**MINOR AXIS, b**	**ELLIPSE ROTATION ANGLE, Θ**
	Single 2-Step MacAdam ellipse	0.4578	0.4101	0.00540	0.00280	53.70°
	Single 3-Step MacAdam ellipse	0.4578	0.4101	0.00810	0.00420	53.70°
	Single 5-Step MacAdam ellipse	0.4578	0.4101	0.01350	0.00700	53.70°

Notes for Table 7b:
1. Lumileds maintains a tolerance of ±0.005 on x and y color coordinates in the CIE 1931 color space.

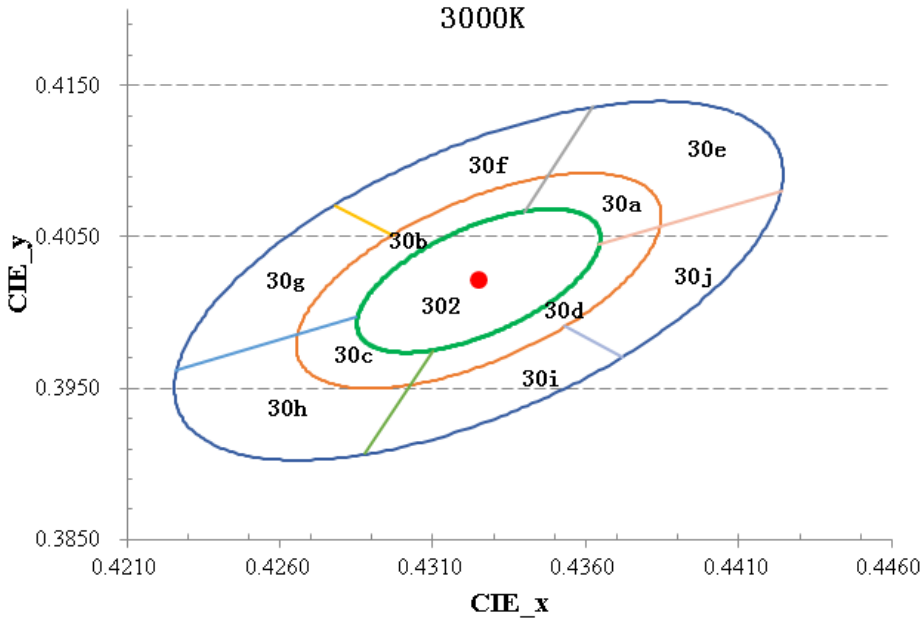

Figure 6b. Color bin structure for 2835R Series 3000K.

Table 7c. Color bin definitions for 2835R Series 3000K, at rated current, T_j=25°C.

NOMINAL CCT	POINT	X	y	POINT	X	y
3000K	1	0.4340	0.4067	7	0.4310	0.3975
	2	0.4362	0.4136	8	0.4288	0.3907
	3	0.4297	0.4051	9	0.4353	0.3991
	4	0.4278	0.4071	10	0.4372	0.3971
	5	0.4285	0.3997	11	0.4364	0.4045
	6	0.4226	0.3962	12	0.4424	0.4080
	COLOR SPACE	**CENTER Cx**	**CENTER Cy**	**MAJOR AXIS, a**	**MINOR AXIS, b**	**ELLIPSE ROTATION ANGLE, Θ**
	Single 2-Step MacAdam ellipse	0.4338	0.403	0.00556	0.00272	53.22°
	Single 3-Step MacAdam ellipse	0.4338	0.403	0.00834	0.00408	53.22°
	Single 5-Step MacAdam ellipse	0.4338	0.403	0.01390	0.00680	53.22°

Notes for Table 7c:
1. Lumileds maintains a tolerance of ±0.005 on x and y color coordinates in the CIE 1931 color space.

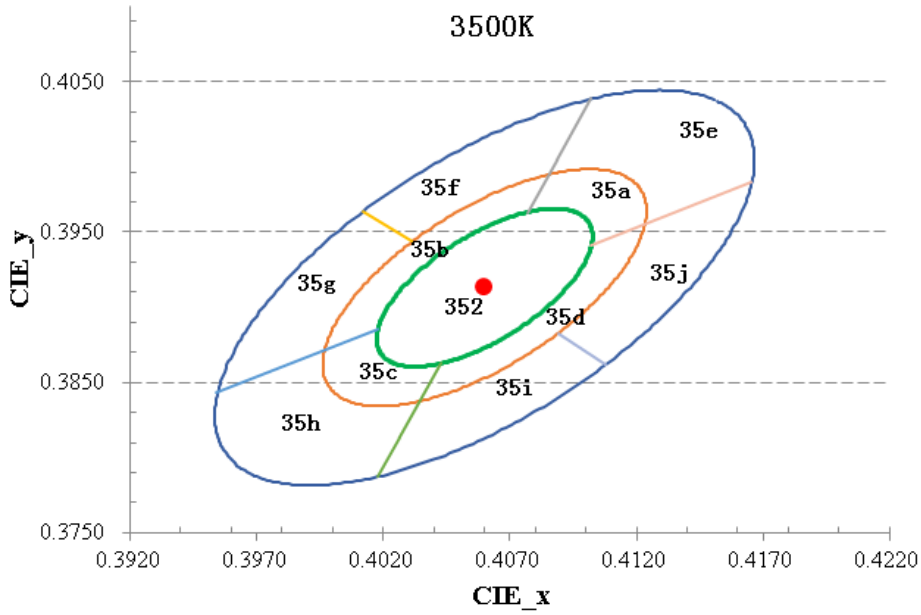

Figure 6c. Color bin structure for 2835R Series 3500K.

Table 7d. Color bin definitions for 2835R Series 3500K, at rated current, T_j=25°C.

NOMINAL CCT	POINT	X	y	POINT	X	y
3500K	1	0.4077	0.3963	7	0.4043	0.3863
	2	0.4102	0.4039	8	0.4018	0.3788
	3	0.4031	0.3944	9	0.4089	0.3882
	4	0.4012	0.3964	10	0.4108	0.3862
	5	0.4018	0.3885	11	0.4102	0.3941
	6	0.3954	0.3843	12	0.4165	0.3983
	COLOR SPACE	**CENTER Cx**	**CENTER Cy**	**MAJOR AXIS, a**	**MINOR AXIS, b**	**ELLIPSE ROTATION ANGLE, Θ**
	Single 2-Step MacAdam ellipse	0.4073	0.3917	0.00618	0.00276	54.00°
	Single 3-Step MacAdam ellipse	0.4073	0.3917	0.00927	0.00414	54.00°
	Single 5-Step MacAdam ellipse	0.4073	0.3917	0.01545	0.00690	54.00°

Notes for Table 7d:
1. Lumileds maintains a tolerance of ±0.005 on x and y color coordinates in the CIE 1931 color space.

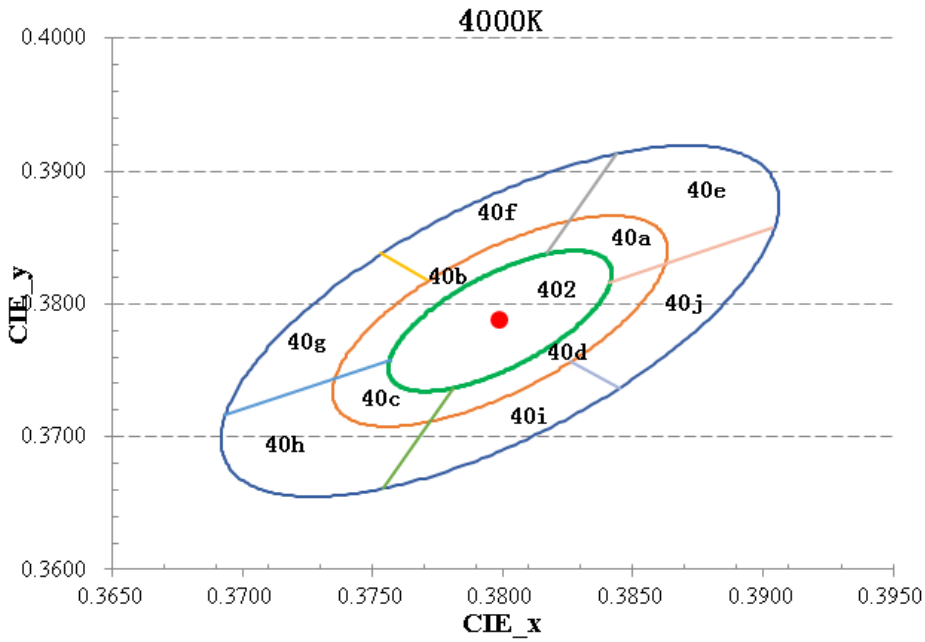

Figure 6d. Color bin structure for 2835R Series 4000K.

Table 7e. Color bin definitions for 2835R Series 4000K, at rated current, T_j=25°C.

NOMINAL CCT	POINT	X	y	POINT	X	y
4000K	1	0.3817	0.3838	7	0.3781	0.3737
	2	0.3844	0.3913	8	0.3754	0.3661
	3	0.3771	0.3818	9	0.3826	0.3757
	4	0.3753	0.3838	10	0.3845	0.3737
	5	0.3757	0.3758	11	0.3841	0.3816
	6	0.3693	0.3716	12	0.3904	0.3858
	COLOR SPACE	**CENTER Cx**	**CENTER Cy**	**MAJOR AXIS, a**	**MINOR AXIS, b**	**ELLIPSE ROTATION ANGLE, Θ**
	Single 2-Step MacAdam ellipse	0.3818	0.3797	0.00626	0.00268	53.72°
	Single 3-Step MacAdam ellipse	0.3818	0.3797	0.00939	0.00402	53.72°
	Single 5-Step MacAdam ellipse	0.3818	0.3797	0.01565	0.00670	53.72°

Notes for Table 7e:
1. Lumileds maintains a tolerance of ±0.005 on x and y color coordinates in the CIE 1931 color space.

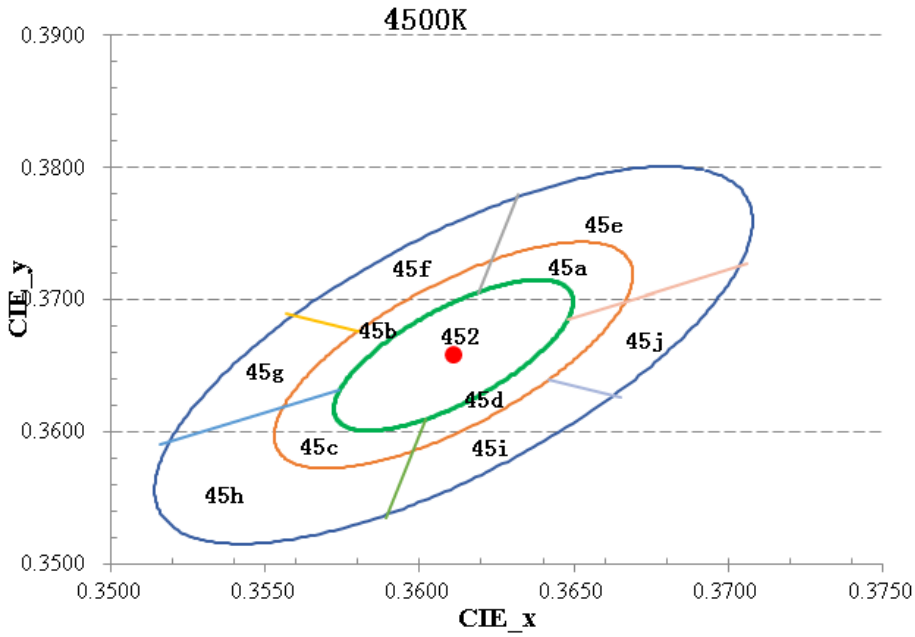

Figure 6e. Color bin structure for 2835R Series 4500K.

Table 7f. Color bin definitions for 2835R Series 4500K, at rated current, T_j=25°C.

NOMINAL CCT	POINT	X	y	POINT	X	y
4500K	1	0.3632	0.3780	7	0.3602	0.3609
	2	0.3619	0.3705	8	0.3589	0.3535
	3	0.3557	0.3690	9	0.3665	0.3626
	4	0.3580	0.3676	10	0.3642	0.3640
	5	0.3516	0.3590	11	0.3648	0.3685
	6	0.3574	0.3632	12	0.3706	0.3727
	COLOR SPACE	**CENTER Cx**	**CENTER Cy**	**MAJOR AXIS, a**	**MINOR AXIS, b**	**ELLIPSE ROTATION ANGLE, Θ**
	Single 2-Step MacAdam ellipse	0.3611	0.3658	0.00240	0.00647	59.62°
	Single 3-Step MacAdam ellipse	0.3611	0.3658	0.00360	0.00971	59.62°
	Single 5-Step MacAdam ellipse	0.3611	0.3658	0.00600	0.01618	59.62°

Notes for Table 7f:
1. Lumileds maintains a tolerance of ±0.005 on x and y color coordinates in the CIE 1931 color space.

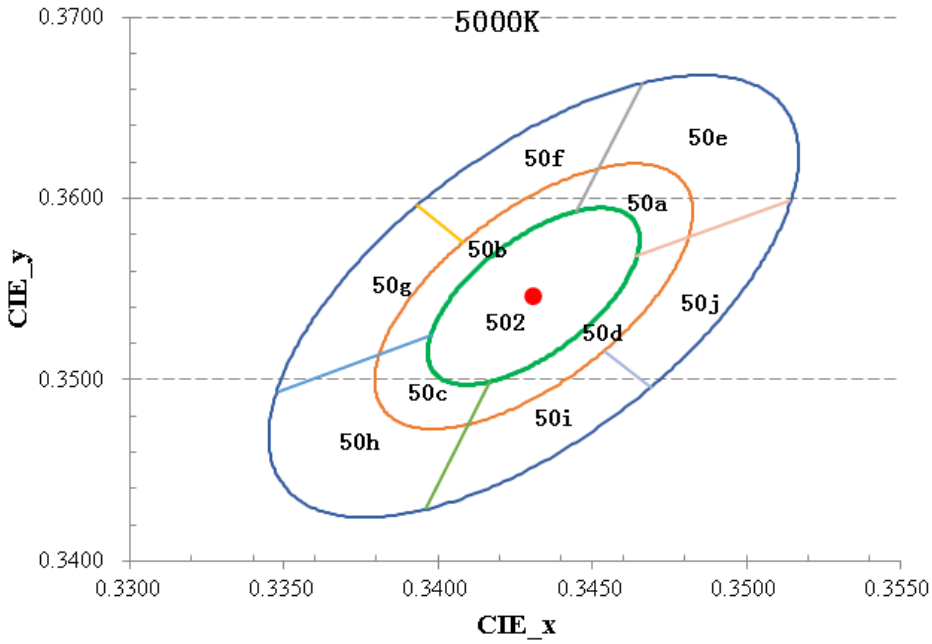

Figure 6f. Color bin structure for 2835R Series 5000K.

Table 7g. Color bin definitions for 2835R Series 5000K, at rated current, T_j=25°C.

NOMINAL CCT	POINT	X	y	POINT	X	y
5000K	1	0.3445	0.3593	7	0.3417	0.3499
	2	0.3466	0.3663	8	0.3396	0.3429
	3	0.3408	0.3576	9	0.3454	0.3516
	4	0.3393	0.3596	10	0.3469	0.3496
	5	0.3398	0.3525	11	0.3464	0.3568
	6	0.3348	0.3493	12	0.3514	0.3599
	COLOR SPACE	**CENTER Cx**	**CENTER Cy**	**MAJOR AXIS, a**	**MINOR AXIS, b**	**ELLIPSE ROTATION ANGLE, Θ**
	Single 2-Step MacAdam ellipse	0.3447	0.3553	0.00548	0.00236	59.62°
	Single 3-Step MacAdam ellipse	0.3447	0.3553	0.00822	0.00354	59.62°
	Single 5-Step MacAdam ellipse	0.3447	0.3553	0.01370	0.00590	59.62°

Notes for Table 7g
1. Lumileds maintains a tolerance of ±0.005 on x and y color coordinates in the CIE 1931 color space.

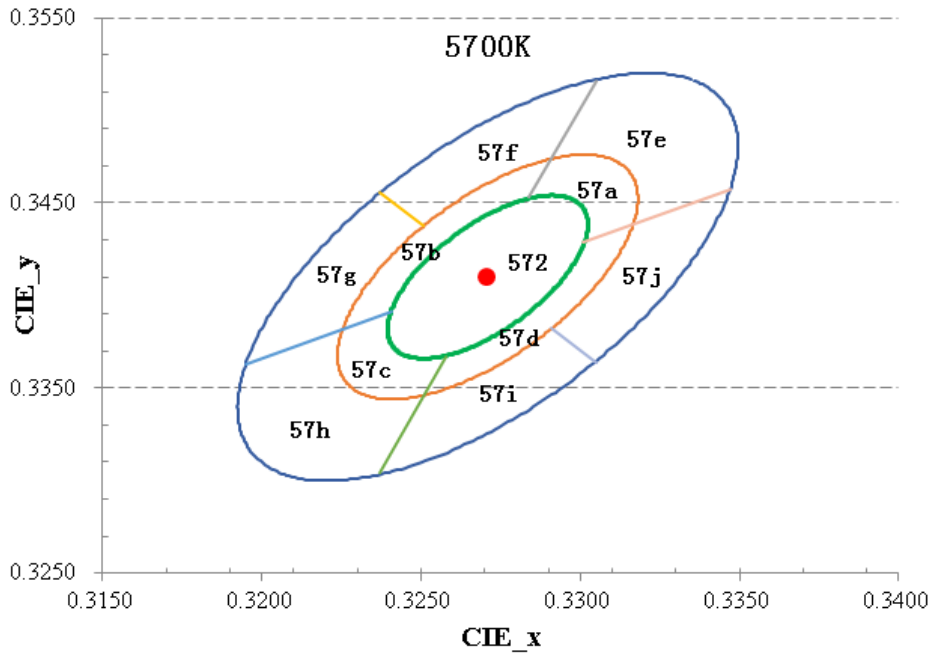

Figure 6g. Color bin structure for 2835R Series 5700K.

Table 7h. Color bin definitions for 2835R Series 5700K, at rated current, T_j=25°C.

NOMINAL CCT	POINT	X	y	POINT	X	y
5700K	1	0.3284	0.3453	7	0.3258	0.3367
	2	0.3305	0.3516	8	0.3237	0.3304
	3	0.3251	0.3438	9	0.3305	0.3364
	4	0.3237	0.3456	10	0.3291	0.3382
	5	0.3241	0.3391	11	0.3301	0.3429
	6	0.3195	0.3363	12	0.3347	0.3457
	COLOR SPACE	**CENTER Cx**	**CENTER Cy**	**MAJOR AXIS, a**	**MINOR AXIS, b**	**ELLIPSE ROTATION ANGLE, Θ**
	Single 2-Step MacAdam ellipse	0.3287	0.3417	0.004973	0.00213	59.09°
	Single 3-Step MacAdam ellipse	0.3287	0.3417	0.007460	0.0032	59.09°
	Single 5-Step MacAdam ellipse	0.3287	0.3417	0.012433	0.00533	59.09°

Notes for Table 7h
1. Lumileds maintains a tolerance of ±0.005 on x and y color coordinates in the CIE 1931 color space.

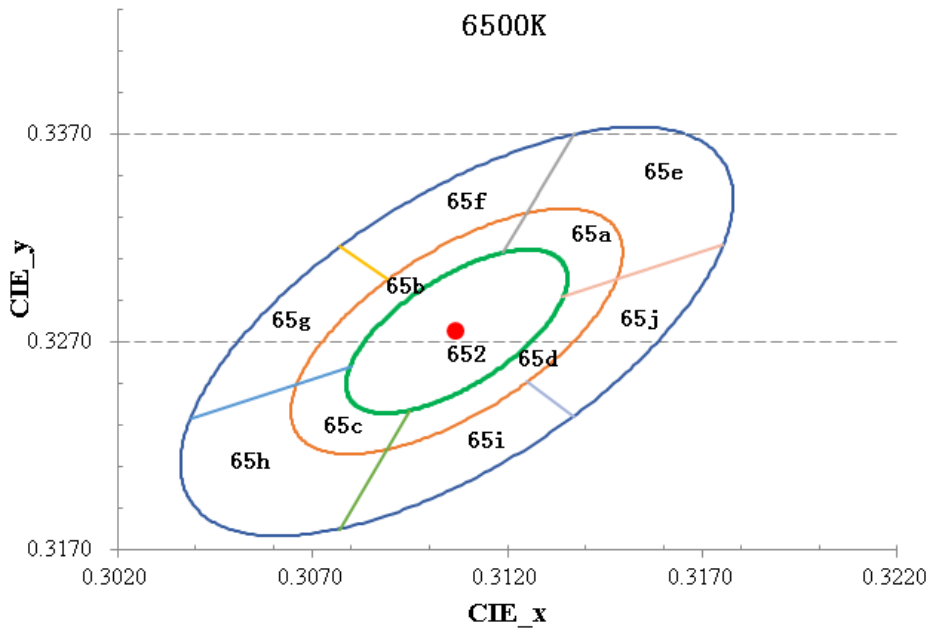

Figure 6h. Color bin structure for 2835R Series 6500K.

Table 7i. Color bin definitions for 2835R Series 6500K, at rated current, T_j=25°C.

NOMINAL CCT	POINT	X	y	POINT	X	y
6500K	1	0.3119	0.3313	7	0.3095	0.3237
	2	0.3137	0.3370	8	0.3077	0.3180
	3	0.3089	0.3300	9	0.3125	0.3251
	4	0.3077	0.3316	10	0.3137	0.3234
	5	0.3080	0.3258	11	0.3134	0.3292
	6	0.3039	0.3233	12	0.3175	0.3317
	COLOR SPACE	**CENTER Cx**	**CENTER Cy**	**MAJOR AXIS, a**	**MINOR AXIS, b**	**ELLIPSE ROTATION ANGLE, Θ**
	Single 2-Step MacAdam ellipse	0.3123	0.3282	0.00446	0.00190	58.57°
	Single 3-Step MacAdam ellipse	0.3123	0.3282	0.00669	0.00285	58.57°
	Single 5-Step MacAdam ellipse	0.3123	0.3282	0.01115	0.00475	58.57°

Notes for Table 7i
1. Lumileds maintains a tolerance of ±0.005 on x and y color coordinates in the CIE 1931 color space.

Forward Voltage Bins

Table 8. Forward voltage bin definitions for 2835R Series at rated current, T_j=25°C.

PRODUCT	BIN	FORWARD VOLTAGE [1] (V_f)	
		MINIMUM	MAXIMUM
L128-xxxxRA35000A1	A	2.6	2.7
	B	2.7	2.8
	C	2.8	2.9
	D	2.9	3.0
	E	3.0	3.1
	F	3.1	3.2
	G	3.2	3.3
L128-xxxxRB35000A1	B	5.8	6.0
	C	6.0	6.2
	D	6.2	6.4
	E	6.4	6.6
L128-xxxxRC35000A1 L128-xxxxRC35000B1 L128-xxxxRC35000C1	A	8.6	8.8
	B	8.8	9.0
	C	9.0	9.2
	D	9.2	9.4
	E	9.4	9.6
L128-xxxxRD35000A1 L128-xxxxRD35000B1	B	16.5	17.0
	C	17.0	17.5
	D	17.5	18.0
	E	18.0	18.5
	F	18.5	19.0
	G	19.0	19.5
L128-xxxxRE35000A1	A	34.0	34.5
	B	34.5	35.0
	C	35.0	35.5
	D	35.5	36.0
	E	36.0	36.5
	F	36.5	37.0
	G	37.0	37.5
	H	37.5	38.0

Notes for Table 8:
1. Lumileds maintains a tolerance of ±0.05V on forward voltage measurements.

 ©2018 Lumileds Holding B.V. All rights reserved.

Mechanical Dimensions

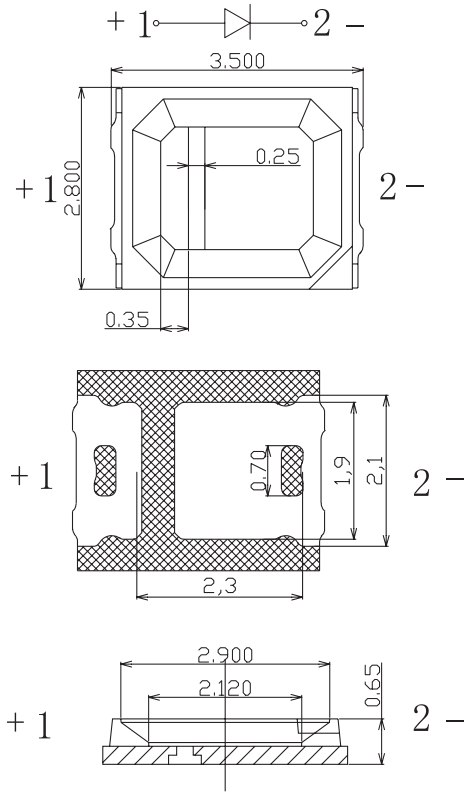

Figure 7a. Mechanical dimensions for L128-xxxxRA35000A1.

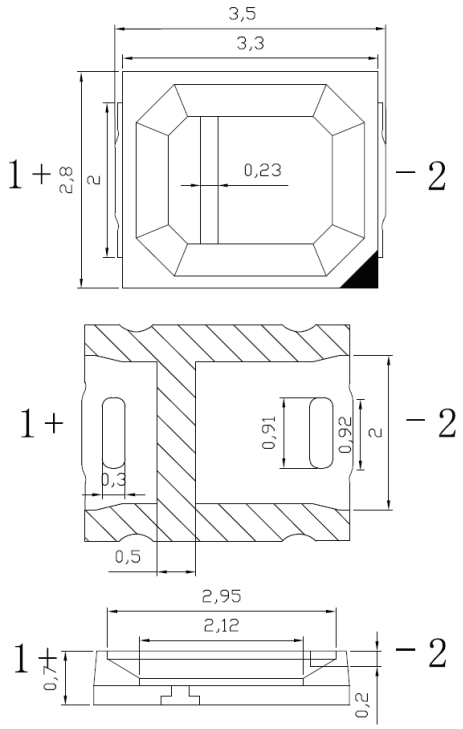

Figure 7b. Mechanical dimensions for L128-xxxxRB35000A1, L128-xxxxRC35000A1, L128-xxxxRC35000B1, L128-xxxxRC35000C1, L128-xxxxRD35000A1, L128-xxxxRD35000B1, and L128-xxxxRE35000A1.

Notes for Figures 7a and 7b:
1. Drawings are not to scale.
2. All dimensions are in millimeters.

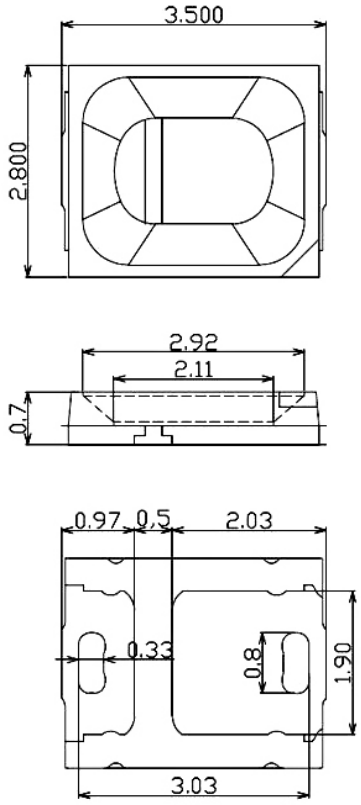

Figure 7c. Mechanical dimensions for L128-xxxxRA35000B1, L128-xxxxRA35000C1, L128-xxxxRA35000D1, and L128-xxxxRA35000E1.

Notes for Figure 7c:
1. Drawings are not to scale.
2. All dimensions are in millimeters.

Reflow Soldering Guidelines

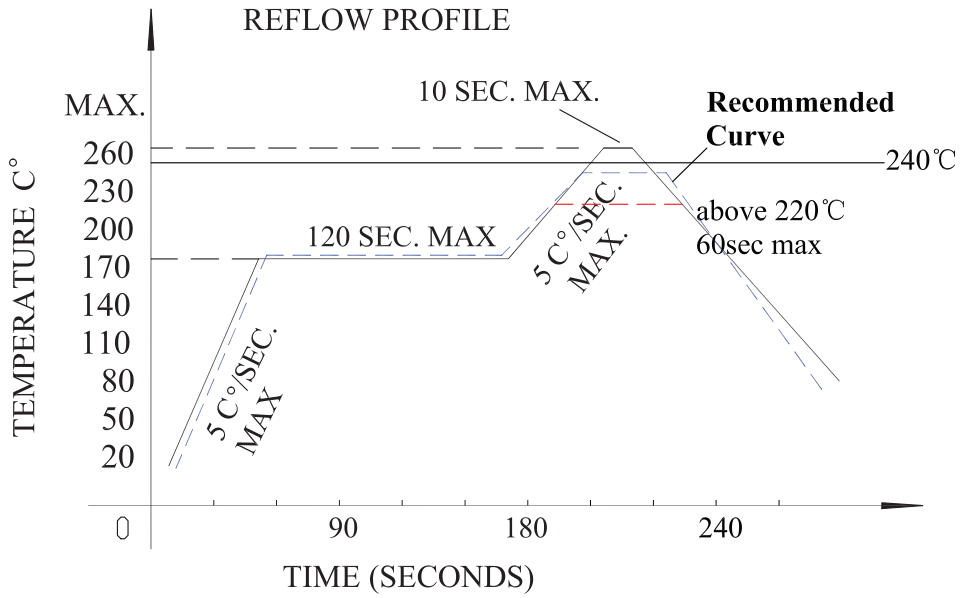

Figure 8. Visualization of the acceptable reflow temperature profile.

Notes for Figure 8:
1. Product is highest resistant to 260°C reflow, but suggested the highest temperature of 240°C.

JEDEC Moisture Sensitivity

Table 9. Moisture sensitivity levels for 2835R Series.

LEVEL	FLOOR LIFE		SOAK REQUIREMENTS STANDARD	
	TIME	CONDITIONS	TIME	CONDITIONS
3	72 Hours	≤30°C / 60% RH	96 Hours +2 / -0	30°C / 60% RH

 ©2018 Lumileds Holding B.V. All rights reserved.

Solder Pad Design

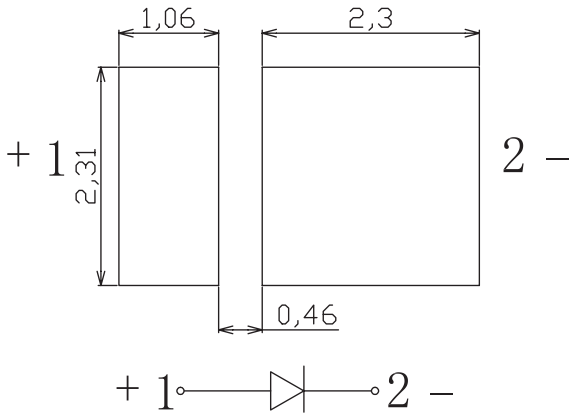

Figure 9a. Recommended PCB solder pad layout for L128-xxxxRA35000A1.

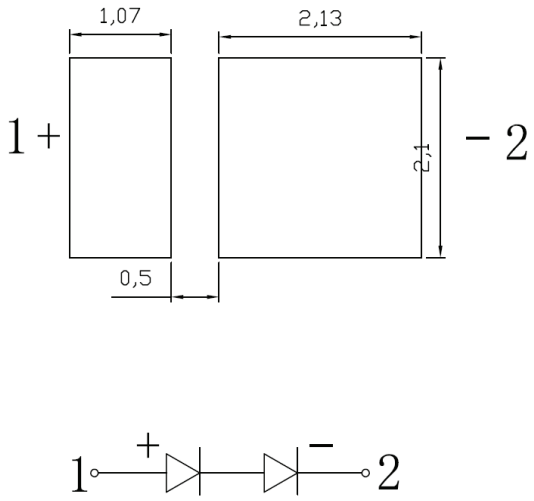

Figure 9b. Recommended PCB solder pad layout for L128-xxxxRB35000A1, L128-xxxxRC35000A1, L128-xxxxRC35000B1, L128-xxxxRC35000C1, L128-xxxxRD35000A1, L128-xxxxRD35000B1, and L128-xxxxRE35000A1..

Notes for Figures 9a and 9b:
1. Drawings are not to scale.
2. All dimensions are in millimeters.

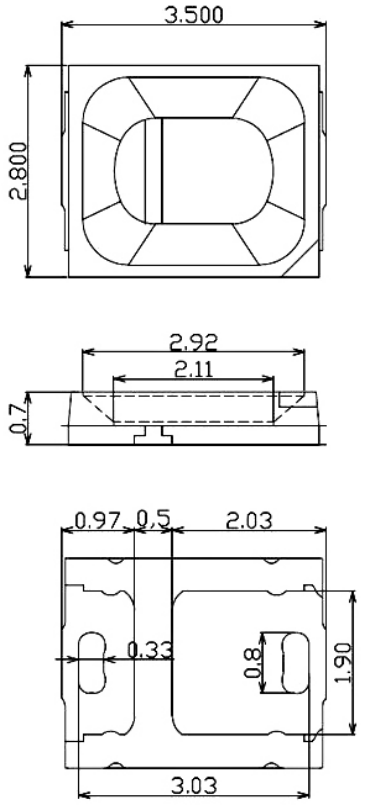

Figure 9c. Recommended PCB solder pad layout for L128-xxxxRA35000B1, L128-xxxxRA35000C1, L128-xxxxRA35000D1, and L128-xxxxRA35000E1.

Notes for Figure 9c:
1. Drawings are not to scale.
2. All dimensions are in millimeters.

Packaging Information

Pocket Tape Dimensions

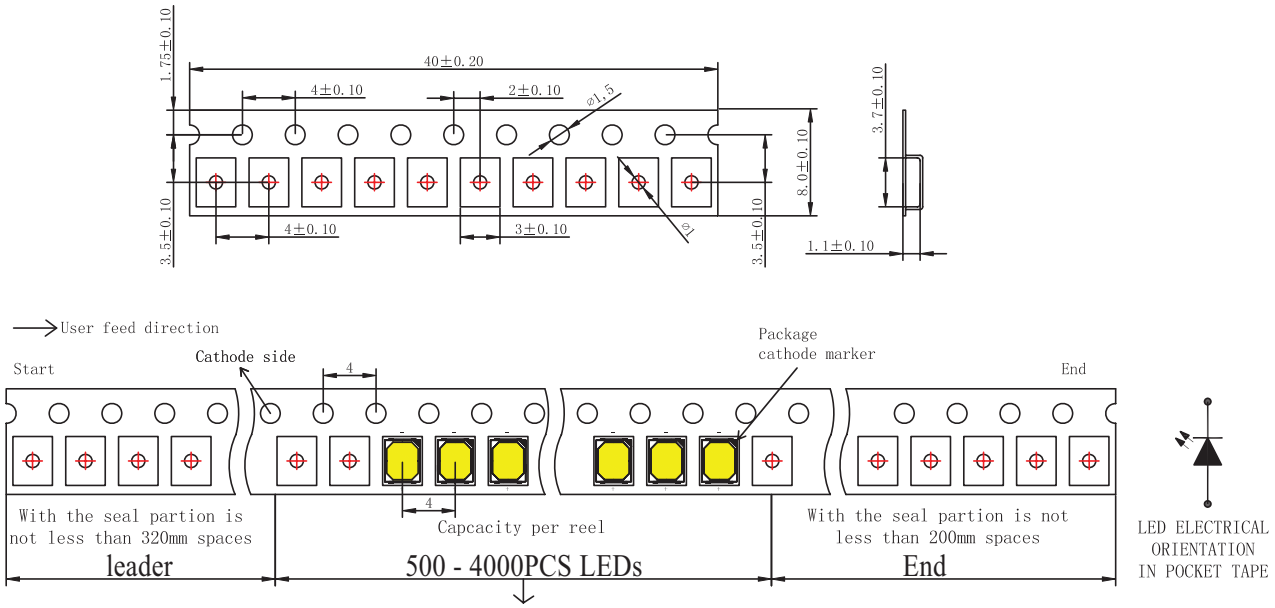

Figure 10. Pocket tape dimensions for 2835R Series.

Notes for Figure 10:
1. Drawings are not to scale.
2. All dimensions are in millimeters.

Reel Dimensions

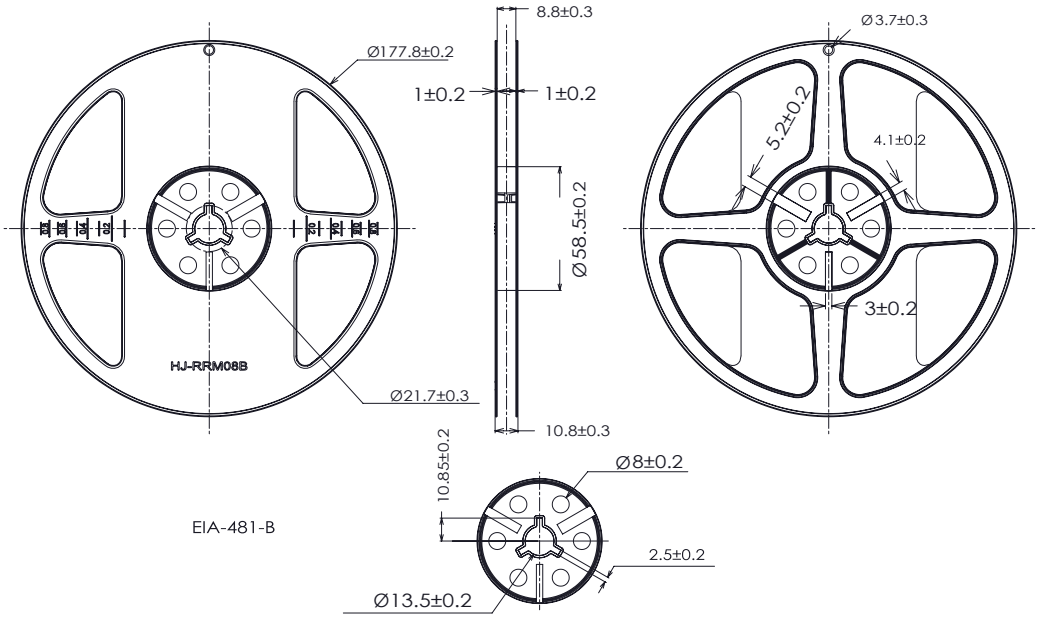

Figure 11. Reel dimensions for 2835R Series.

Notes for Figure 11:
1. Drawings are not to scale.
2. All dimensions are in millimeters.

About Lumileds

Companies developing automotive, mobile, IoT and illumination lighting applications need a partner who can collaborate with them to push the boundaries of light. With over 100 years of inventions and industry firsts, Lumileds is a global lighting solutions company that helps customers around the world deliver differentiated solutions to gain and maintain a competitive edge. As the inventor of Xenon technology, a pioneer in halogen lighting and the leader in high performance LEDs, Lumileds builds innovation, quality and reliability into its technology, products and every customer engagement. Together with its customers, Lumileds is making the world safer, better, more beautiful—with light.

To learn more about our lighting solutions, visit lumileds.com.

LUMILEDS

©2018 Lumileds Holding B.V. All rights reserved.

lumileds.com

Neither Lumileds Holding B.V. nor its affiliates shall be liable for any kind of loss of data or any other damages, direct, indirect or consequential, resulting from the use of the provided information and data. Although Lumileds Holding B.V. and/or its affiliates have attempted to provide the most accurate information and data, the materials and services information and data are provided "as is," and neither Lumileds Holding B.V. nor its affiliates warrants or guarantees the contents and correctness of the provided information and data. Lumileds Holding B.V. and its affiliates reserve the right to make changes without notice. You as user agree to this disclaimer and user agreement with the download or use of the provided materials, information and data. A listing of Lumileds product/patent coverage may be accessed at lumileds.com/patents.

DS232 2835R Series
Product Datasheet 20180720

TEST REPORT

ACCORDING TO IES LM-80-15
For

Lumileds Holding B.V.

370 W. Trimble Road, San Jose, CA 95131, USA

Model: L128-2780RC35000A1

Report Type: 9000 Hours Test Report	**Product Type:** LED Package
Test Engineer:	Pote Wang
Report Number:	R2DG181108050-10
Test Date:	2016-08-26 to 2017-09-05
Report Date:	2018-11-08
Reviewed By:	Daniel Duan / EE Engineer
Test Facility:	Test facility was located at No.69,Pulongcun ,Puxinhu Industrial Area, Tangxia , Dongguan, Guangdong, China.
Prepared By:	Bay Area Compliance Laboratories Corp. (Dongguan). No.69,Pulongcun ,Puxinhu Industrial Area, Tangxia , Dongguan, Guangdong, China. Tel: +86-0769-86858888 Fax:+86-0769-86858588

Note: The test data was only valid for the test sample(s). This test report is prepared for the customer shown above and for the device described herein. It may not be duplicated or used in part without prior written consent from Bay Area Compliance Laboratories Corp. (Dongguan).
This report is valid only with a valid digital signature. The digital signature may be available only under the Adobe software above version 7.0.

TABLE OF CONTENTS

FINAL

1 - General Information

1.1 Description of LED Light Sources

Sample Size:

60 PCS samples were received on 2016-08-26. The samples were numbered from 1 to 30 and 31 to 60.

Manufacturer:	Lumileds Holding B.V.
Part Number:	L128-2780RC35000A1
Part Type:	LED Package
Drive Level:	DC 100mA
Nominal CCT:	2700K
Power:	1W
Average Current Density per LED die:	906.43mA/mm^2
Average Power Density per LED die:	9.5W/mm^2
CRI:	80
Die Spacing:	0.15mm

Sampling Method:

LED samples for IESNA LM-80 testing consist of units built from a minimum of three manufacturing lots with each manufacturing lot built from different wafer lots built on non-consecutive days.
These manufacturing lots are picked to represent a wide parametric distribution.

Family products covered by this report:

According to *ENERGY STAR® Requirements for the Use of LM-80 Data*, the following products can be covered by this report base on the information and declaration provided by manufacturer. The information of these models shows that the covered products meet all section 4 requirements of *ENERGY STAR® Requirements for the Use of LM-80 Data* (September 28, 2017)

This report covers the following models:

Model Name	Total Input Current (mA)	Power (W)	Number of dies	Driver current per die (mA)	Current Density per Die (mA/mm^2)	Power Density per PCB (W/mm^2)	Die Spacing (mm)
L128-xx80RC3500xxx	100	1	3	100	906.43	0.102	0.15

Note:

1. The first and second x denote designates nominal CCT (27=2700K, 30=3000K, 35=3500K, 40=4000K,45=4500K,50=5000K,57=5700K,60=6000K,65=6500K)，

2. The last three x denote designates Lumileds internal codes (0A1, 0B1, 0C1, etc. shares the same base part)

Note:

1. The applicant Lumileds Holding B.V. declare that their products with model L128-2780RC35000A1 are the same to the products in report # RSZ160826505-10-9000 and is authorized by original applicant to use their test data.

2. All the data in previous report (RSZ160826505-10-9000) is shared in this report.

1.2 Standards Used:

- IESNA LM-80-15: IES Approved Method for Measuring Lumen Maintenance of LED Light Sources.
- CIE 127:2007: Measurement of LEDs
- ENERGY STAR® Requirements for the Use of LM-80 Data (This standard was not accredited by IAS)

1.3 Testing Equipment

Device	Manufacture	Model No	Serial No	Test Range	Calibration date	Calibration due date
0.3m integrating sphere	EVERFINE	Diameter 0.3m	1011119	0.3m	2017-03-09	2018-03-09
Programmable Test Power for LEDs	EVERFINE	LED300E	1008002	15V/2000mA	2017-03-03	2018-03-03
High accuracy array spectroradiometer	EVERFINE	HAAS-2000	1012016T	380-780nm	2017-03-09	2018-03-09
Standard Light Source	EVERFINE	D062	1011093	3000K	2016-09-13	2017-09-13
Precision digital stabilized DC power supply	EVERFINE	WY605-V110	G115987C J7321114	300VA	2017-03-03	2018-03-03
Multilayer aging machine	BACL	B2-270	20005	25°C~130°C	2017-09-01	2018-09-01
Digital CC&CV DC Power Supply	EVERFINE	WY5015	11090009	(50/15A)	2016-12-15	2017-12-15
Digital CC&CV DC Power Supply	EVERFINE	WY5015	11090004	(50/15A)	2017-03-03	2018-03-03

1.4 Drive Level

Samples are driven with a constant direct current (DC) during maintenance test, photometric and electrical measurement. The current value was regulated to within ±3% of the specified value of the manufacturer during maintenance test, and was within ±0.5% during photometric and electrical measurement test.

1.5 Ambient Conditions for Maintenance Test

For lumen maintenance test, samples within one data set, were installed on cooling boards in thermal chambers with minimal ambient airflow. The case temperature and ambient temperature

was monitored by thermocouples which one was soldered to the coldest DUTs' case (TMP_{LED}) location, while the other is mounted at a distance of 5 mm above the TMP location.

During life testing, TMP_{LED} of the coldest LEDs were maintained at a temperature that was greater than or equal to 2°C below the corresponding nominal case temperature. Surrounding air was maintained at a temperature that was greater than or equal to 5°C below the corresponding nominal case temperature. Thermocouples were shielded from direct DUT optical radiation and comply with ASTM E230 Table 1 "Special Limits".

Samples were connected to DC power supply in series circuits with a constant current. The forward current was regulated to within ±3% of the specified value of the manufacturer.

The relative humidity within chamber was kept less than 65% during test.

For photometry measurement, the ambient temperature during test was set to 25°C ± 2°C, RH <65%.

1.6 Measurement Uncertainty

The uncertainty of the light output (luminous flux) measurements is U=1.59% (K=2), at the 95% confidence level. The uncertainty of the correlated color temperature measurements is U=21K (K=2), at the 95% confidence level. The uncertainty of the CRI is U=1.7 (K=2), at the 95% confidence level.

The uncertainty of the temperature is U=0.8671°C (K=2), at the 95% confidence level.

1.7 Statement of Traceability

Bay Area Compliance Laboratories Corp. (Dongguan) attested that all calibration has been performed using suitable standards traceable to National Primary Standards and International System of Units (SI).

FINAL

1.8 Sample Set

Data Set 1: 55°C, 100mA

Part Number:	L128-2780RC35000A1
Number of Units:	30
Case Temperature:	>53°C
Ambient Temperature:	>50°C
Life Test Drive Current:	100mA
Measurement Current:	100mA

Data Set 2: 105°C,100mA

Part Number:	L128-2780RC35000A1
Number of Units:	30
Case Temperature:	>103°C
Ambient Temperature:	>100°C
Life Test Drive Current:	100mA
Measurement Current:	100mA

FINAL

2 - Summary of Test Result

Data Set:	Sample Size	Failures Observed:	Test Interval	Test Duration	Reported TM-21 L_{70} Lifetime	Reported TM-21 L_{90} Lifetime
1	30	0	1000	9000	>54000 hours	50000 hours
2	30	0	1000	9000	>54000 hours	36000 hours

Average Lumen Maintenance (Percentage of Initial Luminous Flux)

Data Set:	1000	2000	3000	4000	5000	6000	7000	8000	9000
1	100.23%	100.03%	99.82%	99.59%	99.34%	99.11%	98.90%	98.69%	98.49%
2	99.85%	99.54%	99.23%	98.90%	98.58%	98.27%	98.00%	97.71%	97.43%

Average Color Maintenance

Data Set:	1000	2000	3000	4000	5000	6000	7000	8000	9000
1	0.0005	0.0009	0.0012	0.0017	0.0023	0.0027	0.0031	0.0032	0.0036
2	0.0008	0.0011	0.0016	0.0020	0.0026	0.0030	0.0032	0.0035	0.0039

FINAL

3 - Test Data

3.1 Data Set 1, 55°C, 100mA (Lumen Maintenance)

No.	Φ(lm)	Lumen Maintenance (%)								
	0hr(Initial)	1000hrs	2000hrs	3000hrs	4000hrs	5000hrs	6000hrs	7000hrs	8000hrs	9000hrs
1	116.1	100.34	100.17	100.09	99.83	99.57	99.40	99.22	98.97	98.88
2	124.9	100.16	99.92	99.68	99.28	98.88	98.64	98.48	98.16	97.92
3	120.7	100.17	100.08	99.83	99.59	99.25	98.92	98.67	98.51	98.26
4	120.8	100.25	99.92	99.75	99.50	99.25	98.84	98.59	98.34	98.18
5	124.8	100.08	99.76	99.44	99.36	99.12	98.88	98.72	98.56	98.40
6	124.2	100.16	99.84	99.60	99.28	99.11	98.95	98.55	98.39	98.23
7	119.5	100.33	100.17	99.92	99.83	99.58	99.41	99.16	98.91	98.83
8	121.4	100.16	99.92	99.84	99.59	99.26	99.09	98.76	98.68	98.35
9	124.4	100.08	99.76	99.68	99.36	99.20	98.87	98.63	98.39	98.31
10	124.4	100.32	100.24	99.92	99.60	99.36	99.12	98.87	98.71	98.39
11	120.3	100.33	100.17	99.92	99.67	99.42	99.09	98.92	98.67	98.50
12	121.3	100.41	100.33	100.08	99.92	99.59	99.34	99.01	98.93	98.85
13	126.2	100.24	100.08	99.84	99.76	99.29	99.13	98.81	98.65	98.57
14	121.2	100.17	99.92	99.83	99.75	99.34	99.09	98.84	98.60	98.35
15	122.5	100.16	99.84	99.76	99.43	99.18	99.10	98.94	98.78	98.53
16	124.1	100.32	100.16	99.92	99.52	99.11	98.95	98.87	98.63	98.31
17	123.2	100.24	100.08	99.84	99.59	99.27	99.03	98.94	98.86	98.70
18	124.5	100.08	99.84	99.76	99.44	99.12	98.96	98.80	98.63	98.47
19	123.0	100.16	99.92	99.67	99.59	99.51	99.27	99.11	98.94	98.70
20	125.2	100.32	100.24	100.16	99.84	99.52	99.20	98.88	98.64	98.40
21	125.0	100.24	100.08	99.92	99.68	99.60	99.28	99.12	98.88	98.80
22	118.2	100.42	100.17	99.92	99.75	99.58	99.49	99.24	99.07	98.98
23	118.9	100.25	99.83	99.66	99.50	99.33	99.16	98.99	98.74	98.57
24	122.4	100.33	100.08	99.75	99.43	99.18	98.86	98.77	98.45	98.20
25	122.5	100.16	99.92	99.84	99.59	99.35	99.18	98.94	98.69	98.37
26	124.8	100.24	100.16	99.92	99.68	99.36	99.04	98.96	98.88	98.56
27	128.0	100.08	99.84	99.53	99.22	99.06	98.91	98.75	98.36	98.13
28	124.5	100.32	100.16	99.92	99.76	99.68	99.44	99.28	99.04	98.80
29	122.3	100.16	100.08	99.75	99.67	99.51	99.35	99.26	99.10	98.94
30	124.0	100.32	100.16	99.92	99.76	99.52	99.27	98.95	98.63	98.31
Ave.	122.8	100.23	100.03	99.82	99.59	99.34	99.11	98.90	98.69	98.49
Med.	123.1	100.24	100.08	99.84	99.59	99.33	99.10	98.90	98.68	98.44
st dev	2.6	0.0995	0.1603	0.1585	0.1848	0.1973	0.2089	0.2130	0.2358	0.2674
Min.	116.1	100.08	99.76	99.44	99.22	98.88	98.64	98.48	98.16	97.92
Max.	128.0	100.42	100.33	100.16	99.92	99.68	99.49	99.28	99.10	98.98

TM-21 Projection:

Test Duration: 9000 hours

Failures Observed: 0

α: 2.210E-06

β: 1.005

Reported L_{70}: >54000 hours

Reported L_{90}: 50000 hours

3.2 Data Set 1, 55°C, 100mA (Forward Voltage)

No.	Forward Voltage (V)									
	0hr(Initial)	1000hrs	2000hrs	3000hrs	4000hrs	5000hrs	6000hrs	7000hrs	8000hrs	9000hrs
1	8.965	8.974	8.950	8.943	8.954	8.949	8.951	8.952	8.940	8.961
2	8.981	8.994	8.966	8.957	8.974	8.962	8.958	8.962	8.960	8.973
3	8.937	8.952	8.929	8.911	8.933	8.918	8.924	8.928	8.921	8.927
4	8.954	8.968	8.944	8.929	8.949	8.937	8.935	8.940	8.933	8.940
5	8.934	8.949	8.927	8.906	8.922	8.918	8.918	8.914	8.915	8.919
6	8.960	8.973	8.950	8.939	8.954	8.943	8.941	8.945	8.937	8.949
7	8.976	8.989	8.969	8.951	8.968	8.953	8.959	8.958	8.957	8.965
8	8.982	8.998	8.981	8.962	8.981	8.971	8.969	8.969	8.979	8.982
9	8.934	8.941	8.927	8.907	8.925	8.913	8.915	8.914	8.914	8.927
10	8.943	8.956	8.932	8.918	8.933	8.925	8.919	8.921	8.924	8.938
11	8.947	8.956	8.940	8.925	8.938	8.930	8.928	8.925	8.931	8.965
12	8.967	8.977	8.961	8.945	8.956	8.950	8.943	8.945	8.943	8.967
13	8.933	8.948	8.922	8.913	8.936	8.916	8.910	8.911	8.911	8.927
14	8.948	8.954	8.942	8.929	8.942	8.931	8.923	8.920	8.928	8.951
15	8.960	8.968	8.949	8.942	8.955	8.943	8.937	8.934	8.941	8.964
16	8.932	8.945	8.921	8.912	8.931	8.917	8.914	8.910	8.914	8.924
17	8.930	8.943	8.916	8.906	8.928	8.914	8.914	8.908	8.907	8.931
18	9.007	9.016	8.998	8.981	8.996	8.986	8.991	8.985	8.981	8.996
19	8.929	8.943	8.921	8.913	8.922	8.913	8.913	8.904	8.910	8.925
20	8.926	8.939	8.919	8.913	8.919	8.911	8.910	8.908	8.916	8.930
21	8.999	9.007	8.988	8.979	8.990	8.984	8.983	8.983	8.976	8.989
22	8.928	8.948	8.926	8.914	8.921	8.918	8.915	8.921	8.916	8.929
23	8.949	8.962	8.942	8.938	8.938	8.929	8.927	8.935	8.926	8.939
24	8.934	8.946	8.922	8.916	8.920	8.919	8.918	8.917	8.912	8.926
25	8.963	8.978	8.952	8.943	8.954	8.944	8.946	8.970	8.944	8.954
26	8.935	8.944	8.928	8.942	8.927	8.919	8.918	8.926	8.916	8.930
27	8.952	8.966	8.946	8.937	8.942	8.935	8.929	8.940	8.933	8.947
28	8.919	8.933	8.916	8.906	8.915	8.906	8.908	8.913	8.909	8.920
29	8.970	8.984	8.964	8.954	8.962	8.954	8.957	8.970	8.958	8.962
30	8.933	8.947	8.924	8.912	8.931	8.919	8.912	8.924	8.912	8.932
Ave.	8.951	8.963	8.942	8.931	8.944	8.934	8.933	8.935	8.932	8.946
Med.	8.948	8.956	8.941	8.929	8.938	8.930	8.926	8.927	8.927	8.940
st dev	0.022	0.022	0.022	0.022	0.022	0.022	0.023	0.024	0.022	0.022
Min.	8.919	8.933	8.916	8.906	8.915	8.906	8.908	8.904	8.907	8.919
Max.	9.007	9.016	8.998	8.981	8.996	8.986	8.991	8.985	8.981	8.996

3.3 Data Set 1, 55°C, 100mA (Chromaticity Shift)

No.	u'	v'	CCT(K)	Chromaticity Shift (Δu'v')								
	0hr(Initial)			1000hrs	2000hrs	3000hrs	4000hrs	5000hrs	6000hrs	7000hrs	8000hrs	9000hrs
1	0.2574	0.5292	2801	0.0004	0.0007	0.0012	0.0016	0.0019	0.0022	0.0026	0.0028	0.0031
2	0.2558	0.5311	2826	0.0004	0.0009	0.0013	0.0018	0.0022	0.0025	0.0028	0.0032	0.0035
3	0.2607	0.5321	2718	0.0004	0.0009	0.0012	0.0017	0.0021	0.0025	0.0028	0.0030	0.0034
4	0.2599	0.5301	2743	0.0005	0.0009	0.0016	0.0019	0.0023	0.0027	0.0031	0.0032	0.0036
5	0.2587	0.5328	2756	0.0004	0.0009	0.0016	0.0020	0.0024	0.0028	0.0032	0.0033	0.0037
6	0.2591	0.5351	2738	0.0005	0.0010	0.0016	0.0020	0.0024	0.0027	0.0031	0.0032	0.0037
7	0.2593	0.5301	2755	0.0003	0.0007	0.0013	0.0016	0.0020	0.0025	0.0028	0.0029	0.0033
8	0.2564	0.5271	2833	0.0005	0.0009	0.0016	0.0020	0.0025	0.0028	0.0033	0.0035	0.0037
9	0.2579	0.5323	2775	0.0005	0.0010	0.0016	0.0020	0.0024	0.0028	0.0031	0.0033	0.0037
10	0.2583	0.5337	2762	0.0005	0.0009	0.0015	0.0020	0.0023	0.0028	0.0031	0.0033	0.0037
11	0.2597	0.5305	2745	0.0005	0.0009	0.0013	0.0021	0.0025	0.0028	0.0032	0.0034	0.0039
12	0.2582	0.5304	2778	0.0005	0.0007	0.0010	0.0019	0.0023	0.0027	0.0031	0.0032	0.0036
13	0.2592	0.5337	2743	0.0004	0.0009	0.0010	0.0017	0.0022	0.0026	0.0029	0.0030	0.0034
14	0.2568	0.5276	2820	0.0005	0.0009	0.0012	0.0017	0.0025	0.0029	0.0033	0.0034	0.0037
15	0.2593	0.5322	2746	0.0004	0.0006	0.0009	0.0014	0.0022	0.0026	0.0028	0.0029	0.0033
16	0.2596	0.5323	2740	0.0005	0.0009	0.0011	0.0016	0.0023	0.0027	0.0030	0.0032	0.0035
17	0.2560	0.5289	2832	0.0005	0.0010	0.0012	0.0017	0.0025	0.0029	0.0032	0.0035	0.0038
18	0.2591	0.5336	2746	0.0004	0.0008	0.0010	0.0015	0.0021	0.0025	0.0029	0.0031	0.0035
19	0.2570	0.5317	2797	0.0004	0.0005	0.0008	0.0015	0.0023	0.0026	0.0030	0.0033	0.0036
20	0.2598	0.5327	2733	0.0005	0.0009	0.0011	0.0016	0.0023	0.0027	0.0031	0.0031	0.0035
21	0.2574	0.5304	2794	0.0004	0.0009	0.0011	0.0015	0.0022	0.0026	0.0029	0.0031	0.0034
22	0.2589	0.5257	2784	0.0004	0.0009	0.0012	0.0017	0.0025	0.0029	0.0032	0.0034	0.0037
23	0.2591	0.5287	2767	0.0005	0.0010	0.0013	0.0017	0.0025	0.0030	0.0033	0.0036	0.0038
24	0.2591	0.5310	2756	0.0006	0.0010	0.0013	0.0017	0.0024	0.0028	0.0031	0.0034	0.0035
25	0.2566	0.5289	2820	0.0005	0.0011	0.0013	0.0017	0.0025	0.0029	0.0034	0.0034	0.0037
26	0.2564	0.5293	2821	0.0004	0.0009	0.0011	0.0016	0.0023	0.0028	0.0031	0.0032	0.0035
27	0.2595	0.5344	2733	0.0005	0.0009	0.0011	0.0016	0.0023	0.0027	0.0030	0.0031	0.0034
28	0.2585	0.5333	2758	0.0005	0.0009	0.0012	0.0017	0.0023	0.0028	0.0031	0.0033	0.0036
29	0.2589	0.5316	2758	0.0004	0.0009	0.0011	0.0016	0.0023	0.0027	0.0030	0.0031	0.0035
30	0.2599	0.5323	2733	0.0004	0.0010	0.0012	0.0017	0.0025	0.0028	0.0032	0.0033	0.0036
Ave.	0.2584	0.5311	2770	0.0005	0.0009	0.0012	0.0017	0.0023	0.0027	0.0031	0.0032	0.0036
Med.	0.2589	0.5314	2758	0.0005	0.0009	0.0012	0.0017	0.0023	0.0027	0.0031	0.0032	0.0036
st dev	0.0013	0.0023	34	0.0001	0.0001	0.0002	0.0002	0.0002	0.0002	0.0002	0.0002	0.0002
Min.	0.2558	0.5257	2718	0.0003	0.0005	0.0008	0.0014	0.0019	0.0022	0.0026	0.0028	0.0031
Max.	0.2607	0.5351	2833	0.0006	0.0011	0.0016	0.0021	0.0025	0.0030	0.0034	0.0036	0.0039

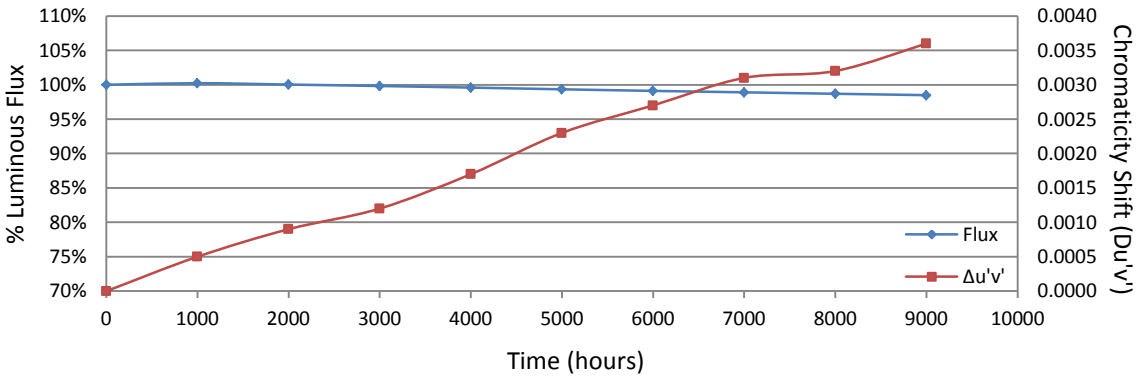

3.4 Data Set 2, 105°C, 100mA (Lumen Maintenance)

No.	Φ(lm)	Lumen Maintenance (%)								
	0hr(Initial)	1000hrs	2000hrs	3000hrs	4000hrs	5000hrs	6000hrs	7000hrs	8000hrs	9000hrs
31	124.1	99.92	99.60	99.52	99.36	99.11	98.79	98.55	98.31	98.15
32	120.0	99.83	99.58	99.42	99.17	98.92	98.67	98.42	98.25	98.08
33	120.9	99.42	99.09	98.68	98.26	97.77	97.60	97.27	97.02	96.77
34	120.7	99.83	99.42	98.92	98.51	98.09	97.76	97.35	96.93	96.77
35	125.6	99.84	99.60	99.20	98.81	98.41	98.17	98.01	97.69	97.37
36	123.1	99.68	99.43	99.11	98.86	98.62	98.29	98.05	97.64	97.48
37	118.5	99.75	99.41	99.16	98.90	98.73	98.48	98.31	98.14	97.81
38	123.1	99.92	99.76	99.59	99.35	99.03	98.70	98.46	98.13	97.89
39	119.8	99.75	99.42	99.08	98.91	98.75	98.41	98.25	98.00	97.83
40	125.5	99.92	99.68	99.28	99.04	98.57	98.33	98.01	97.77	97.45
41	124.1	99.84	99.60	99.27	98.87	98.63	98.31	98.23	97.82	97.58
42	118.1	100.08	99.83	99.58	99.32	99.07	98.73	98.56	98.48	98.31
43	121.2	99.75	99.50	99.09	98.60	98.35	98.10	97.77	97.52	97.19
44	120.2	99.83	99.42	99.08	98.84	98.50	98.17	98.00	97.67	97.34
45	117.3	99.74	99.57	99.32	98.89	98.47	97.95	97.70	97.53	97.36
46	125.6	99.84	99.52	99.20	98.89	98.57	98.17	97.93	97.53	97.13
47	117.3	99.74	99.40	99.06	98.72	98.47	98.21	97.78	97.53	97.27
48	123.1	100.08	99.68	99.27	99.03	98.70	98.38	97.97	97.64	97.24
49	126.1	99.92	99.60	99.37	99.05	98.65	98.33	97.86	97.38	97.07
50	123.2	100.08	99.68	99.43	99.19	98.78	98.38	98.13	97.73	97.32
51	124.6	99.76	99.52	99.20	98.88	98.64	98.39	98.31	97.99	97.59
52	124.1	99.92	99.52	99.36	98.95	98.55	98.23	98.07	97.74	97.50
53	123.2	99.84	99.51	99.27	98.78	98.38	98.05	97.81	97.56	97.24
54	123.9	99.76	99.44	99.11	98.71	98.39	97.90	97.58	97.26	96.93
55	122.6	99.92	99.51	99.02	98.78	98.37	98.12	97.80	97.39	96.98
56	124.8	99.84	99.36	98.96	98.48	98.24	98.00	97.60	97.28	96.96
57	124.0	99.76	99.35	99.11	98.79	98.39	97.98	97.58	97.42	97.10
58	125.2	99.84	99.52	99.28	98.80	98.56	98.24	97.92	97.68	97.44
59	123.4	99.92	99.76	99.43	99.27	98.95	98.62	98.30	98.14	97.81
60	119.4	100.08	99.83	99.41	99.08	98.83	98.49	98.32	98.16	97.99
Ave.	122.4	99.85	99.54	99.23	98.90	98.58	98.27	98.00	97.71	97.43
Med.	123.2	99.84	99.52	99.24	98.88	98.57	98.27	98.01	97.68	97.36
st dev	2.6	0.1370	0.1570	0.2031	0.2585	0.2902	0.2842	0.3372	0.3756	0.4064
Min.	117.3	99.42	99.09	98.68	98.26	97.77	97.60	97.27	96.93	96.77
Max.	126.1	100.08	99.83	99.59	99.36	99.11	98.79	98.56	98.48	98.31

TM-21 Projection:

Test Duration: 9000 hours

Failures Observed: 0

α: 2.978E-06

β: 1.001

Reported L_{70}: >54000 hours

Reported L_{90}: 36000 hours

3.5 Data Set 2, 105°C, 100mA (Forward Voltage)

No.	Forward Voltage (V)									
	0hr(Initial)	1000hrs	2000hrs	3000hrs	4000hrs	5000hrs	6000hrs	7000hrs	8000hrs	9000hrs
31	8.959	8.977	8.953	8.955	8.956	8.944	8.944	8.946	8.939	8.958
32	8.982	9.000	8.978	8.970	8.979	8.971	8.968	8.968	8.968	8.974
33	8.944	8.962	8.940	8.946	8.937	8.931	8.926	8.937	8.932	8.935
34	8.915	8.930	8.912	8.904	8.907	8.905	8.906	8.914	8.904	8.909
35	8.944	8.961	8.935	8.931	8.938	8.926	8.925	8.943	8.943	8.939
36	8.922	8.945	8.923	8.912	8.919	8.918	8.912	8.933	8.907	8.922
37	8.931	8.949	8.936	8.919	8.926	8.925	8.917	8.928	8.925	8.934
38	8.909	8.926	8.907	8.902	8.908	8.898	8.895	8.904	8.898	8.903
39	8.979	8.997	8.981	8.978	8.980	8.968	8.972	8.990	8.979	8.983
40	8.942	8.951	8.935	8.937	8.936	8.923	8.928	8.944	8.931	8.931
41	8.978	8.992	8.976	8.968	8.972	8.966	8.962	8.972	8.966	8.990
42	8.992	9.010	8.992	8.990	8.986	8.986	8.980	8.984	8.986	8.991
43	8.934	8.948	8.922	8.930	8.922	8.919	8.915	8.911	8.922	8.924
44	8.996	8.988	8.967	8.955	8.963	8.964	8.957	8.956	8.961	8.963
45	8.984	8.969	8.956	8.945	8.947	8.942	8.940	8.937	8.937	8.947
46	8.942	8.942	8.927	8.919	8.921	8.922	8.910	8.918	8.915	8.921
47	8.968	8.973	8.956	8.952	8.951	8.954	8.942	8.945	8.955	8.953
48	8.927	8.931	8.917	8.906	8.911	8.905	8.898	8.910	8.903	8.914
49	9.000	8.997	8.990	8.981	8.982	8.983	8.977	8.976	8.998	8.983
50	8.935	8.942	8.931	8.920	8.925	8.923	8.919	8.920	8.929	8.920
51	8.965	8.964	8.954	8.940	8.949	8.948	8.935	8.939	8.939	8.945
52	8.941	8.944	8.927	8.923	8.922	8.928	8.915	8.921	8.923	8.923
53	8.965	8.972	8.951	8.983	8.946	8.946	8.941	8.941	8.943	8.946
54	8.974	8.980	8.962	8.960	8.962	8.956	8.956	8.949	8.957	8.960
55	8.925	8.937	8.919	8.910	8.909	8.914	8.902	8.910	8.926	8.912
56	8.925	8.934	8.917	8.918	8.917	8.918	8.911	8.911	8.913	8.913
57	8.988	8.997	8.976	8.973	8.974	8.970	8.971	8.972	8.970	8.977
58	8.916	8.924	8.904	8.903	8.900	8.900	8.900	8.899	8.892	8.896
59	8.932	8.941	8.921	8.917	8.918	8.915	8.914	8.902	8.912	8.918
60	8.963	8.972	8.951	8.950	8.942	8.942	8.944	8.934	8.948	8.945
Ave.	8.953	8.962	8.944	8.940	8.940	8.937	8.933	8.937	8.937	8.941
Med.	8.944	8.962	8.938	8.939	8.938	8.930	8.927	8.937	8.935	8.937
st dev	0.027	0.025	0.026	0.027	0.026	0.025	0.026	0.025	0.027	0.027
Min.	8.909	8.924	8.904	8.902	8.900	8.898	8.895	8.899	8.892	8.896
Max.	9.000	9.010	8.992	8.990	8.986	8.986	8.980	8.990	8.998	8.991

3.6 Data Set 2, 105°C, 100mA (Chromaticity Shift)

No.	u'	v'	CCT(K)	Chromaticity Shift (Δu'v')								
	0hr(Initial)			1000hrs	2000hrs	3000hrs	4000hrs	5000hrs	6000hrs	7000hrs	8000hrs	9000hrs
31	0.2568	0.5301	2808	0.0008	0.0012	0.0017	0.0019	0.0026	0.0031	0.0033	0.0036	0.0039
32	0.2608	0.5300	2725	0.0007	0.0009	0.0013	0.0016	0.0023	0.0027	0.0029	0.0032	0.0035
33	0.2569	0.5281	2815	0.0008	0.0011	0.0017	0.0022	0.0026	0.0031	0.0034	0.0037	0.0040
34	0.2580	0.5296	2785	0.0008	0.0011	0.0016	0.0021	0.0026	0.0030	0.0031	0.0036	0.0039
35	0.2577	0.5320	2780	0.0007	0.0010	0.0015	0.0019	0.0025	0.0030	0.0031	0.0035	0.0038
36	0.2596	0.5325	2740	0.0011	0.0014	0.0019	0.0023	0.0027	0.0032	0.0034	0.0038	0.0041
37	0.2618	0.5320	2697	0.0008	0.0011	0.0016	0.0020	0.0025	0.0029	0.0031	0.0034	0.0038
38	0.2614	0.5322	2702	0.0009	0.0011	0.0016	0.0020	0.0025	0.0029	0.0030	0.0034	0.0038
39	0.2591	0.5307	2757	0.0009	0.0012	0.0017	0.0020	0.0026	0.0030	0.0031	0.0035	0.0039
40	0.2579	0.5321	2776	0.0009	0.0013	0.0017	0.0023	0.0028	0.0030	0.0033	0.0038	0.0042
41	0.2573	0.5315	2793	0.0006	0.0011	0.0016	0.0021	0.0026	0.0030	0.0032	0.0035	0.0038
42	0.2595	0.5276	2762	0.0008	0.0012	0.0017	0.0021	0.0026	0.0030	0.0031	0.0036	0.0039
43	0.2592	0.5303	2757	0.0009	0.0013	0.0018	0.0022	0.0028	0.0031	0.0033	0.0038	0.0042
44	0.2584	0.5281	2784	0.0008	0.0012	0.0016	0.0020	0.0025	0.0030	0.0030	0.0034	0.0037
45	0.2606	0.5285	2734	0.0008	0.0011	0.0016	0.0020	0.0025	0.0029	0.0031	0.0035	0.0038
46	0.2596	0.5340	2732	0.0008	0.0012	0.0016	0.0020	0.0025	0.0030	0.0030	0.0034	0.0039
47	0.2569	0.5279	2818	0.0009	0.0013	0.0017	0.0022	0.0026	0.0030	0.0033	0.0037	0.0041
48	0.2585	0.5318	2764	0.0007	0.0010	0.0015	0.0018	0.0024	0.0029	0.0031	0.0034	0.0038
49	0.2573	0.5315	2793	0.0009	0.0012	0.0018	0.0021	0.0027	0.0030	0.0032	0.0036	0.0040
50	0.2602	0.5328	2726	0.0008	0.0012	0.0016	0.0020	0.0025	0.0030	0.0031	0.0035	0.0038
51	0.2557	0.5289	2839	0.0008	0.0011	0.0017	0.0020	0.0026	0.0030	0.0031	0.0035	0.0039
52	0.2575	0.5315	2789	0.0009	0.0012	0.0016	0.0020	0.0025	0.0029	0.0031	0.0034	0.0038
53	0.2565	0.5285	2822	0.0009	0.0011	0.0017	0.0022	0.0027	0.0030	0.0034	0.0037	0.0041
54	0.2579	0.5307	2783	0.0009	0.0012	0.0018	0.0022	0.0026	0.0031	0.0034	0.0037	0.0040
55	0.2598	0.5330	2733	0.0007	0.0009	0.0014	0.0019	0.0024	0.0028	0.0030	0.0033	0.0038
56	0.2575	0.5313	2788	0.0007	0.0009	0.0014	0.0020	0.0023	0.0028	0.0030	0.0034	0.0039
57	0.2580	0.5299	2783	0.0008	0.0011	0.0016	0.0020	0.0025	0.0029	0.0031	0.0035	0.0038
58	0.2594	0.5327	2743	0.0008	0.0011	0.0016	0.0019	0.0024	0.0028	0.0031	0.0034	0.0038
59	0.2565	0.5293	2818	0.0007	0.0011	0.0016	0.0020	0.0025	0.0030	0.0031	0.0036	0.0039
60	0.2602	0.5298	2738	0.0008	0.0012	0.0018	0.0022	0.0028	0.0032	0.0034	0.0038	0.0041
Ave.	0.2586	0.5306	2769	0.0008	0.0011	0.0016	0.0020	0.0026	0.0030	0.0032	0.0035	0.0039
Med.	0.2582	0.5307	2778	0.0008	0.0011	0.0016	0.0020	0.0026	0.0030	0.0031	0.0035	0.0039
st dev	0.0016	0.0017	37	0.0001	0.0001	0.0001	0.0002	0.0001	0.0001	0.0001	0.0001	0.0002
Min.	0.2557	0.5276	2697	0.0006	0.0009	0.0013	0.0016	0.0023	0.0027	0.0029	0.0032	0.0035
Max.	0.2618	0.5340	2839	0.0011	0.0014	0.0019	0.0023	0.0028	0.0032	0.0034	0.0038	0.0042

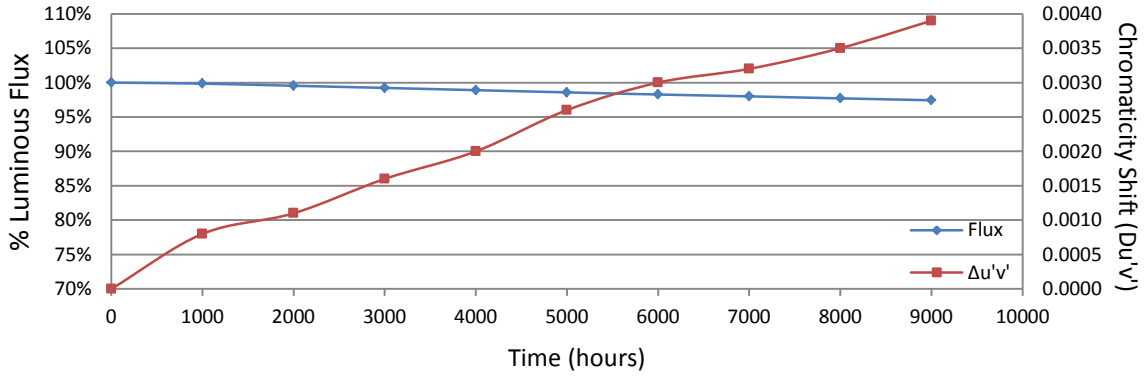

4 - EUT Photo

4.1 Mechanical Dimensions

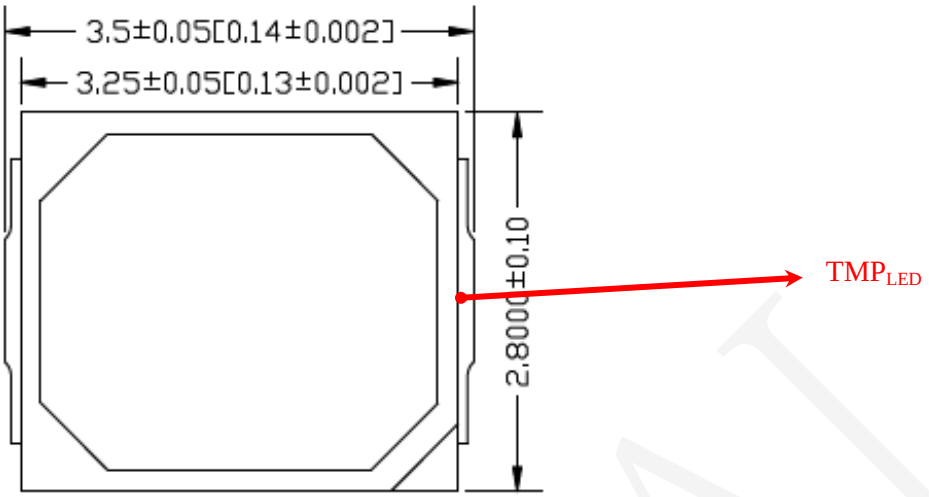

All dimensions are in millimeter

4.2 EUT Photo

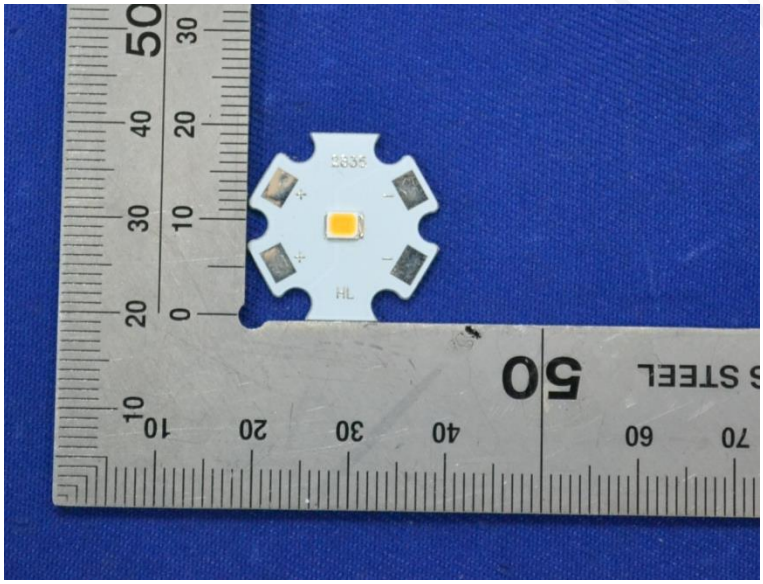

**********END OF REPORT**********

Egyptian Electricity Holding Company
Laboratories, research and testing sector
Extra High Voltage Research Center

الشركة القابضة لكهرباء مصر
قطاع المعامل والبحوث والاختبارات
مركز أبحاث الجهد الفائق

الموضـــوع: اختبار كشاف إضاءة شوارع ليد قدرة (١٠٠) وات طراز : (TU) - انتاج شركة طيبة للصناعات المتطورة .

السيد المهندس / مدير إدارة الاضاءة

شركة طيبة للصناعات المتطورة

تحية طيبة وبعد ....

بالاشارة إلى كتاب سيادتكم واستلام العينة بتاريخ ٢٠٢٢/٤/٢٦ م، بخصوص الموضوع عاليه .

نتشرف بالاحاطه بأنه تم إجراء الاختبارات المطلوبه وتم إعداد التقرير الفنى رقم (٢٠٢٢/٢٥٤) المتضمن نتائج الاختبارات علما بان تكاليف إجراء الاختبارات هى مبلغ وقدره (٩٣٨١) جنيه (فقط وقدره تسعة الاف وثلاثمائة وواحد وثمانون جنيها مصريا لاغير) شاملة ١٤ % قيمة ضريبة القيمة المضافة

وقد تم سداد المبلغ المشار اليه بعاليه وتم استلام التقرير الفني المكون من (٥)صفحة

وتفضلوا بقبول فائق الاحترام والتقدير ....

رئيس قسم الشئون المالية بالمركز
محاسب/ ربيع محمد عبدالعزيز

مدير عام الإدارة العامة للمعايرة والجودة الشاملة
مهندس/ إيهاب فوزي محمود

رئيس قطاع
المعامل والبحوث والاختبارات
"د. مهندس/ سلوى علي أحمد"

شريف ٢٠٢٢/٦/١٥

مقر المركز: طريق القاهرة – الإسكندرية الصحراوي – الكيلو ٢٧ – ت: ٣٥٣٩٠٧٢٨ – فاكس: ٣٥٣٩٠٧٣١
عنوان المراسلات : Email : eng_salwa_2010@hotmail.com

TEST REPORT

REPORT No. (254 /2022)

- **CLIENT: TEBA for Development Industries.**

  Plot No.1 –Industrial Zone(7A) – 10th of Ramadan- Egypt.

- **Report Date: 15/ 6 /2022.**

- **Place:**

  - EXTRA HIGH VOLTAGE RESEARCH CENTER LABORATORIES
  - Internal Code: TO – AC – 22 – 04 – 26 - 06.

- **Requirements:**

  - Test of LED street lighting luminaires (100) watt according to IEC standard.

- **Standard Specification:**

  - IEC (60598 –1)/(2008) : Luminaires – Part 1: General requirements and tests.
  - IEC (62722-2-1)/(2011) : Luminaire performance – Part 2-1: Particular requirements for LED luminaires.
  - IEC (62717)/(2015) : LED Modules for general lighting-Performance requirements.
  - IEC (61000-3-2)/(2018) : Electromagnetic compatibility (EMC) - Part 3-2: Limits -Limits for harmonic current emissions(equipment input current ≤ 16 A per phase).

- **Description of Specimen:**

  - LED street lighting luminaire (100) watt – Type: (TU) - Rated Input power: (100) Watt - Manufactured by TEBA for Development Industries - Made in Egypt.

- **Description of Testing Equipment:**

  1. Measure Device: Everfine GO-2000A_v1.
  2. Power analyzer, Model: (HIOKI-3196) - Certificate No.: (218/23/2020).
  3. Two voltage transformers – Type: (UZGT10) - Serial No.: (929130/65) and (925007/65).
  4. Insulation resistance apparatus (MEGGAR) - Serial No.: (32772-2).

- **Test Sample:**

  - Test sample was chosen under the responsibility of the client.

- **Tests:**

  1- Marking.
  2- Insulation Resistance.
  3- Electric Strength.
  4- Total Input Power.
  4.1 LED luminaire Power.
  4.2 Displacement Factor.
  5- Luminous Flux.
  6- Correlated Colour Temperature (CCT).
  7- Colour Rendering Index (CRI).
  8- Luminaire Efficacy.

- **Test Method and Results:**

1- Marking

Testing Date: 1/6/2022 **Testing Engineer**: Mohamed Antar

- The test was carried out according to clause (3.4) of IEC (60598-1).
- The marking shall be legible, marking labels shall not be easily removable and they shall show no curling.
- **The LED luminaire met the requirements.**

2- Insulation Resistance

Testing Date:1/6/2022 **Testing Engineer**: Mohamed Antar

- The test was carried out according to sub-clause (10.2.1) of IEC (60598-1).
- The insulation resistance shall be more than (2) MΩ.
- The measured value of the insulation resistance was (15.8) GΩ .
- **The LED luminaire passed the test**

3- Electric Strength

Testing Date: 1/6/2022 **Testing Engineer**: Mohamed Antar

- The test was carried out according to sub-clause (10.2.2) of IEC (60598-1).
- No flashover or breakdown shall occur during the test.
- **The LED luminaire passed the test.**

4- Total Input Power

Testing Date: 6/6/2022 **Testing Engineer**: Mohamed Khairy

- The test was carried out according to clause (7) of IEC (62722-2-1) as following:

4.1 LED luminaire Power

- The test was carried out according to clause (7.1) of IEC (62717).
- The initial power consumed shall not exceed the rated power (100) Watt by more than (10) %.
- The measured value of the total power at the rated voltage (220 V) for the LED Luminaire was (102.09) Watt.
- **The LED luminaire met the requirements.**

4.2 Displacement Factor

- The test was carried out according to clause (7.2) of IEC (62717).
- The displacement factor shall not be less than (0.99) by more than (0.05).
- The measured value of Total Harmonic Distortion (THD) for current was (7.26) %.

M.Khairy

- The harmonic currents shall not exceed the relative limits given in [Table 2] of IEC (61000-3-2).
- The maximum permissible harmonic current expressed as a percentage of the input current at the fundamental frequency illustrated in the following table:

No.	Harmonic order	Maximum permissible	Measured value	Remark
1	2	2	0.33	Pass
2	3	28.95	4.79	Pass
3	5	10	2.8	Pass
4	7	7	1.3	Pass
5	9	5	2.005	Pass
6	$11 \leq n \leq 39$ (Odd harmonic only)	3	0.75 (Max.)	Pass

- The measured value of the power factor was (0.965).
- The displacement factor value for the LED Luminaire was (0.967).
- **The LED luminaire met the requirements**

5- Luminous flux

Testing Date:6/6/2022 **Witness Engineer**: Mohamed Khairy

- The test was carried out according to clause (8.1) of IEC (62722-2-1).
- The initial luminous flux shall not be less than the rated luminous flux (12000) lm, by more than (10) %.
- The measured value of the luminous flux for the LED Luminaire was (12347.8) lm.
- **The LED luminaire met the requirements**

6- Correlated Colour Temperature (CCT)

Testing Date: 6/6/2022 **Witness Engineer**: Mohamed khairy

- The test was carried out according to clause (9.2) of IEC (62722-2-1).
- The measured value of correlated colour temperature (CCT) for the LED Luminaire was (5877) K.
- **The LED luminaire achieved the above value.**

7-Colour Rendering Index (CRI)

Testing Date: 6/6/2022 **Witness Engineer**: Mohamed khairy

- The test was carried out according to clause (9.3) of IEC (62722-2-1).
- The measured value of initial Colour Rendering Index (CRI) for the LED Luminaire was (82.1).
- **The LED luminaire achieved the above value.**

M. Khairy

8-Luminaire Efficacy

Testing Date: 6/6/2022 **Witness Engineer**: Mohamed Antar

- The test was carried out according to clause (8.3) of IEC (62722-2-1).
- The LED Luminaire efficacy shall not be less than (90) % of the rated LED Luminaire efficacy (120) lm/W.
- The measured value of luminaire efficacy was (120.95) lm/W.
- **The LED luminaire met the requirements**

Conclusion:

- **The LED street lighting luminaire (100) watt – Type: (TU) - Rated Input power: (100) Watt - Manufactured by TEBA for Development Industries - Made in Egypt, achieved the results of tests mentioned in this report according to IEC. The customer to check of carrying out other remaining tests specified in IEC standard and not included in this report.**

Notes:

- Tests were carried out on the above specimen only without any responsibility concerning other untested specimens.
- The tests were carried out without any obligation on Egyptian Electricity Holding Company
- This test report shall not be reproduced except in full, without written approval of EHVRC.
- This report and results are related only to the tested specimen.
- This report to be stamped for use.
- This test report is forbidden to be reproduced without prior permission of the Extra High Voltage Research Centre.
- This report is valid for the tested specimen and for a maximum three years unless there is a change in the design or specifications mentioned in this report.

Test Engineers:

A.C. Lab. Imp. Lab.

Eng. Mohamed Antar Eng. Mohamed Khairy

General Manager

Eng. Ehab Fawzy Mahmoud

Head Sector

Dr. Eng. Salwa Ali Ahmed

Sherif...

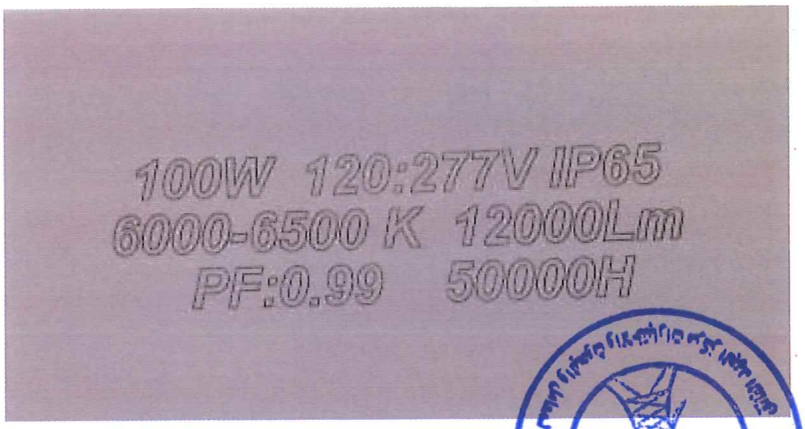
100W 120:277V IP65
6000-6500 K 12000Lm
PF:0.99 50000H

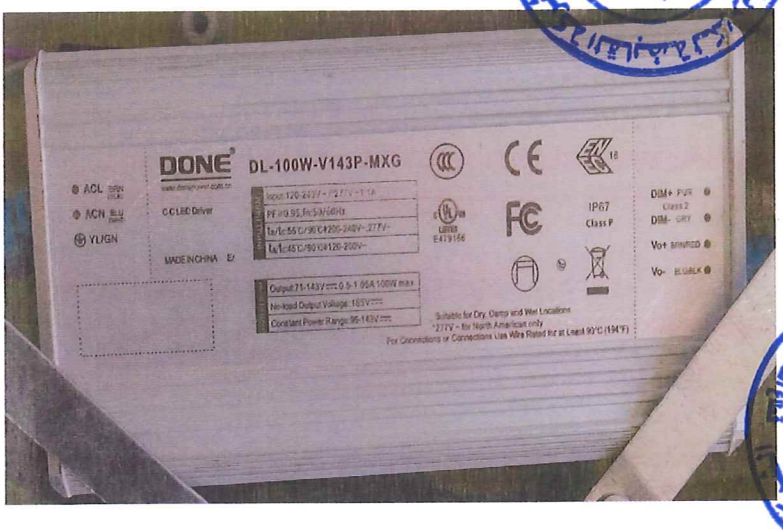
DONE
DL-100W-V143P-MXG
MADE IN CHINA
IP67
Class P

M. Khairy

٥٢٢/٢٥٤

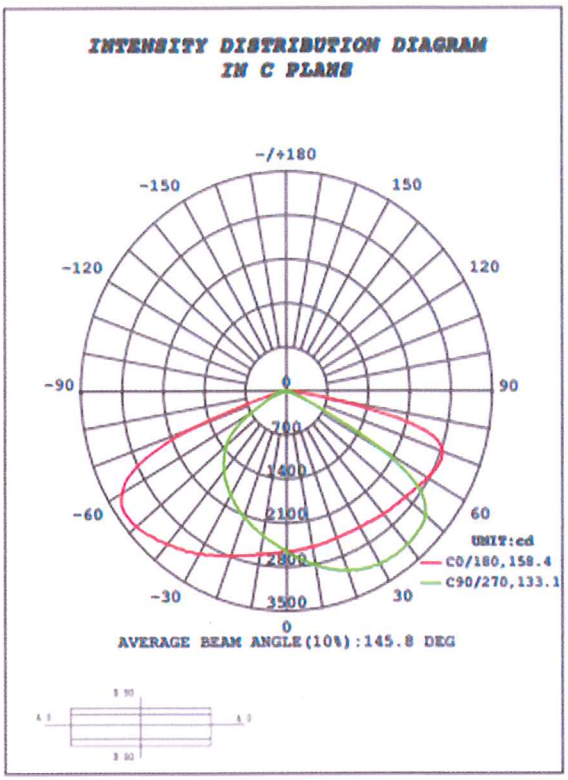

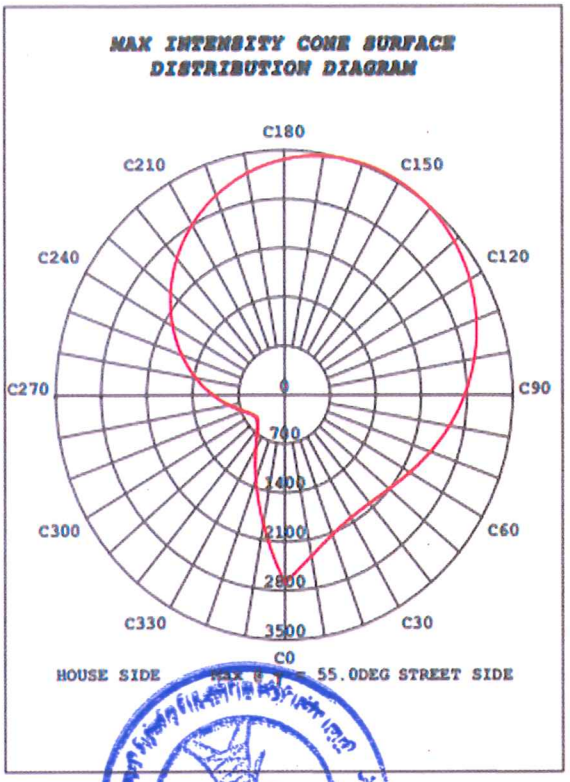

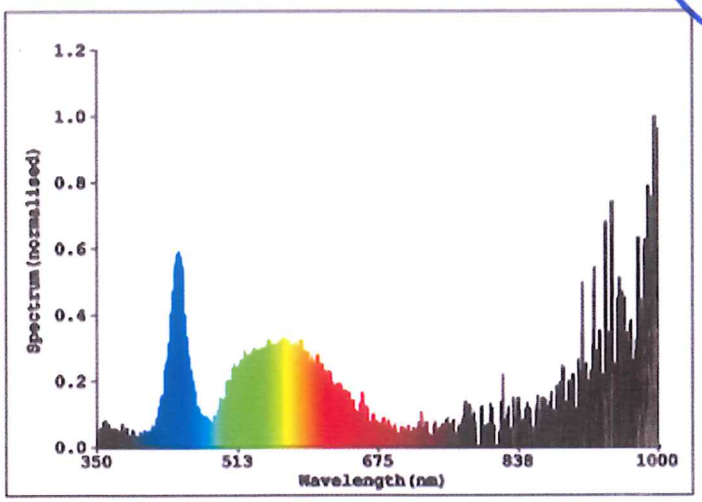

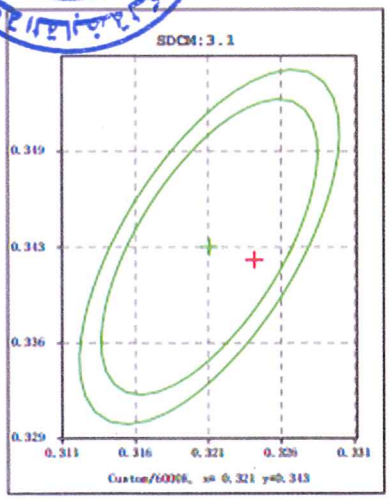

Color Parameters:

Chromaticity Coordinates:x=0.3241 y=0.3416/u'=0.2010 v'=0.4766 duv=0.00408

Tc=5877K Dominant WL:Ld=503.8nm Purity=2.8%

Ratio:R=12.8% G=83.7% B=3.5% Peak WL:Lp=995.6nm HWL:0.3nm

Rendering Index:Ra=82.1 TM-30: Rf=74 Rg=94 CQS: Qa=72.94 TLCI = 51

R1 =70 R2 =75 R3 =79 R4 =74 R5 =73 R6 =69 R7 =79

R8 =60 R9 =-29 R10=42 R11=75 R12=53 R13=70 R14=88 R15=64

E = 0.4096 lx Ee = 0.0016 W/m2

Report No.: 86

Degrees of Protection Provided by Enclosures for Electrical Equipment Against External Mechanical Impacts (IK08)

Applicant	TEBA for development industries
Address	10th Of Ramadan
Product Covered	Street light
Representative (tested) model	8100
Testing Standard	IEC62262-2-75 , IEC 60068
Testing Results	Passed

Test item particular :

Test no.	Test Method	Sample serial No.	Pass/Fail
1	Clause 5 IEC 60068-2-75	8100	Pass

Electrical rating:

Model No.	Voltage	Frequency	Power
8100	220 V	50 HZ	100 W

Test Results:

· IK08 Test:

Fixture model(s) tested	IK code tested	Impact energy	Passed/Failed (P/F)
8100	08	5 J	PASS

LED Electrical Laboratory

El bahth St. From Joseph Tito ,El Nozha Elgedeeda,Cairo -Egypt
شارع البحث العلمى متفرع من جوزيف تيتو ؛النزهة الجديدة ؛القاهرة ؛مصر
Postal code : 11843 Fax (+202) 33369738
الرقم البريدى 11843 فاكس (+202) 23336973
Nozha Tel. (+202) 26252779, Dokki Tel. (+202) 3369738
ت النزهة (+202) 26252779 الدقى : (+202) 336973
Email: info@erl.sci.eg Websit www.eri.sci.eg

Table 1 –Relation between IK code and impact energy

IK code	IK00	IK01	IK02	IK03	IK04	IK05	IK06	IK07	IK08	IK09	IK10
Impact energy. J	0	0.14	0.2	0.35	0.5	0.7	1	2	5	10	20
*Not protected according to this standard											
Note 1 When higher impact energy is required. The value of 50 j is recommended Note 2 A characteristic group numeral of two figures has been chosen to avoid confusion with some national standards which used a single numeral for a specific impact energy											

Impact Locations: :

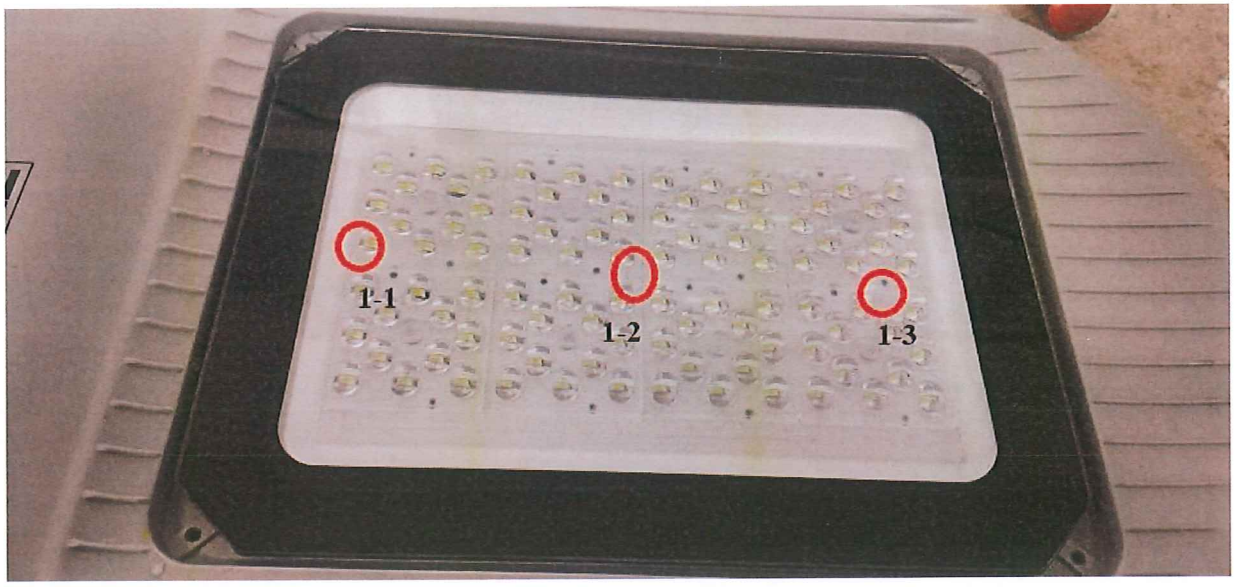

Result:

There was no accessibility of contact of uninsulated live parts, or internal wiring becoming
accessible to contact, as determined by the accessibility probe;
There was no reduction of spacing to values below the minimum acceptable values;
There was no reduction in the effectiveness of strain relief means;
There was no cracking or denting of the enclosure that might reduce the effectiveness of the enclosure to keep out water or dust

Approved by :

LED Electrical Laboratory

El bahth St. From Joseph Tito ,El Nozha Elgedeeda,Cairo -Egypt
Postal code : 11843 Fax (+202) 33369738
Nozha Tel. (+202) 26252779, Dokki Tel. (+202) 3369738
Email: info@erl.sci.eg Websit www.eri.sci.eg

شارع البحث العلمى متفرع من جوزيف تيتو ؛النزهة الجديدة ؛القاهرة ؛مصر
الرقم البريدى 11843 فاكس (+202) 23336973
ت النزهة (+202) 26252779 الدقى : (+202) 336973

Report No.87

Fragmentation test for flat glass

Applicant	TEBA for development industries
Address	10th Of Ramadan
Product Covered	Street light
Representative (tested) model	8100
Testing Standard	EN 12150-1
Testing Results	Passed

Test Results:

Fixture model(s) tested	test criteria	Result	Passed/Failed (P/F)
8100	The counting of Fragments : 40 to 350	102	PASS

Sample photo :

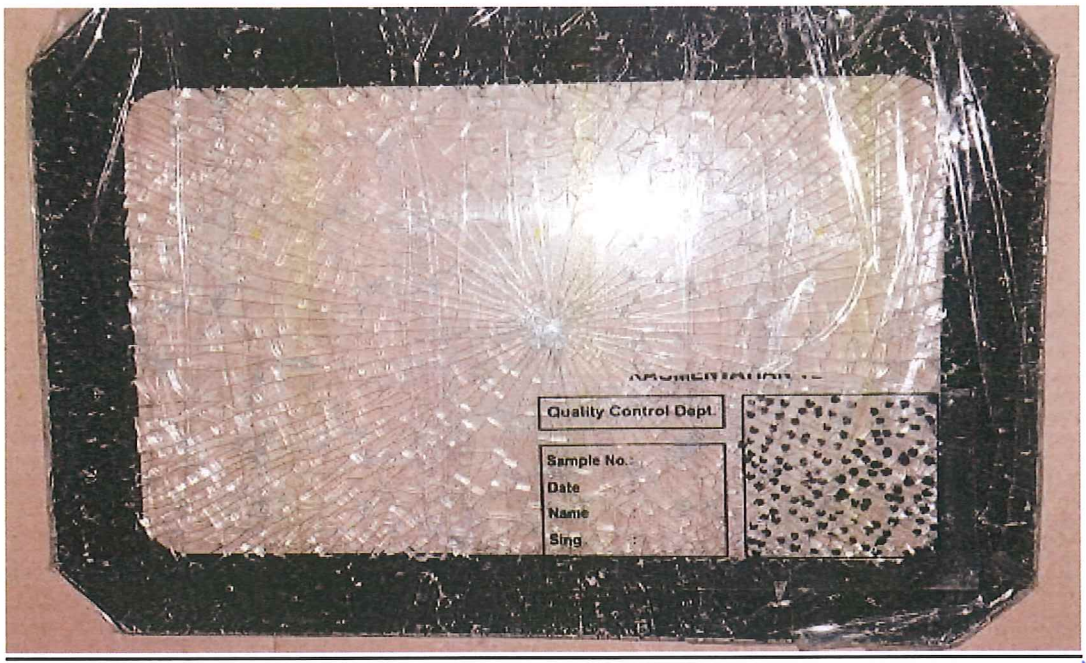

Approved by :

LED Electrical Laboratory

El bahth St. From Joseph Tito ,El Nozha Elgedeeda,Cairo -Egypt
شارع البحث العلمى متفرع من جوزيف تيتو ؛النزهة الجديدة ؛القاهرة ؛مصر
Postal code : 11843 Fax (+202) 33369738
الرقم البريدى 11843 فاكس (+202) 23336973
Nozha Tel. (+202) 26252779, Dokki Tel. (+202) 3369738
ت النزهة (+202) 26252779 الدقى : (+202) 336973
Email: info@erl.sci.eg Websit www.eri.sci.eg

ERC
Energy Research Center
Faculty of Engineering - Cairo University

مركز بحوث الطاقة
كلية الهندسة – جامعة القاهرة

GLASS FRAGMENTATION TEST FOR LED STREET LIGHTING LUMINAIRE

- **Customer** : **TEBA for development industries**
- **Intenational standards** :
  - **BS/EN 12151-1**
  - **BS/EN 12150-1**
- **The luminaire data:**
  - **STREET LED LUMINAIRE**
  - **100W/150W**
  - **TEBA UNITED**
  - **CODE: 8100/8150**

مركز بحوث الطاقة
كلية الهندسة جامعة القاهرة
ERC - CUFE

- **The glass sample tested:**
  - **THICKNESS = 4mm - WIDTH = 192mm - LENGTH = 260mm**
- **Test Results**

Item	No. of total fragments	Min. requirement	Result
GLASS FRAGMENTATION TEST	116	40	PASSED

- **Tested by:**

Dr. Mohamed Rabah Yousief Amer

Approved by

Rabah Amer

Prof. Rabah Yousief Amer
ERC Director

13-02-2022

Giza - Egypt Tel : 35702406 - 35699107 Fax : 35702406
الجيزة – جمهورية مصر العربية ت: ٣٥٧٠٢٤٠٦ – ٣٥٦٩٩١٠٧ فاكس: ٣٥٧٠٢٤٠٦

E R C
Energy Research Center
Faculty of Engineering - Cairo University

مركز بحوث الطاقة
كلية الهندسة - جامعة القاهرة

IMPACT PROTECTION RATINGS (IK) RATING of LED STREET LIGHTING LUMINAIRE

- **Customer** : **TEBA for development industries**
- **Intenational standards** :
  - **IEC 62262:2002**

  Degrees of protection provided by enclosures for electrical equipment against external mechanical impacts (IK code)

- **Sample Tested:**
  - **STREET LED LUMINAIRE**
  - **100W/150W**
  - **TEBA UNITED**
  - **CODE: 8100/8150**

- **Test Results**

Item	Testing	Result
IK Rating	IK08	Compliant with the classification declared by the manufacturer

- **Tested by:**

Dr. Mohamed Rabah Yousief Amer

مركز بحوث الطاقة
كلية الهندسة جامعة القاهرة

ERC - CUFE

Approved by

Prof. Rabah Yousif Amer
ERC Director

09-02-2022

Giza - Egypt Tel.: 35678140 Tel & Fax: 35702406
الجيزة - جمهورية مصر العربية ت: ٣٥٦٧٨١٤٠ ت.فاكس: ٣٥٧٠٢٤٠٦

E R C
Energy Research Center
Faculty of Engineering - Cairo University

مركز بحوث الطاقة
كلية الهندسة - جامعة القاهرة

Ingress Protection (IP) Rating of led street lighting luminaire

- **Customer** : **TEBA for development industries**
- **Intenational standards** :
  - **IEC 60529:1989 +A1:1999+A2:2013**

    Degrees of protection provided by enclosures (IP Code)
- **Sample Tested:**
  - **STREET LED LUMINAIRE**
  - **100W/150W**
  - **TEBA UNITED**
  - **CODE: 8100/8150**
- **Test Results**

Item	Measured Value	Result
IP degree of protection	IP65	Compliant with the classification declared by the manufacturer

- **Tested by:**

Dr. Mohamed Rabah Yousief Amer

مركز بحوث الطاقة
كلية الهندسة جامعة القاهرة
ERC - CUFE

Approved by

Rabah Amer

Prof. Rabah Yousif Amer
ERC Director

يعتمد توقيع المدير

09-02-2022

Giza - Egypt Tel.: 35678140 Tel & Fax: 35702406
الجيزة - جمهورية مصر العربية ت: ٣٥٦٧٨١٤٠ ت.فاكس: ٣٥٧٠٢٤٠٦